CITY OF SANTA CRUZ
City Hall
809 Center Street
Santa Cruz, California 95060

PLANNING COMMISSION

Regular Meeting

September 3, 2020

7:00 P.M. GENERAL BUSINESS AND MATTERS OF PUBLIC INTEREST, COUNCIL CHAMBERS

The City of Santa Cruz does not discriminate against persons with disabilities. Out of consideration for people with chemical sensitivities, we ask that you attend fragrance free. Upon request, the agenda can be provided in a format to accommodate special needs. Additionally, if you wish to attend this public meeting and will require assistance such as an interpreter for American Sign Language, Spanish, or other special equipment, please call the City Clerk's Department at (831) 420-5030 at least five days in advance so that we can arrange for such assistance, or email cityclerk@cityofsantacruz.com. The Cal-Relay system number: 1-800-735-2922.

Any writing related to an agenda item for the open session of this meeting distributed to the Planning Commission less than 72 hours before this meeting is available for inspection at the City Planning Department, 809 Center Street, Room 107 or on the City's website at www.cityofsantacruz.com. These writings will also be available for review at the Planning Commission meeting in the public review binder at the rear of the Council Chambers.

APPEALS: Any person who believes that a final action of this advisory body has been taken in error may appeal that decision to the City Council. Appeals must be in writing, setting forth the nature of the action and the basis upon which the action is considered to be in error, and addressed to the City Council in care of the City Clerk.

Appeals must be received by the City Clerk within ten (10) calendar days following the date of the action from which such appeal is being taken. An appeal must be accompanied by a six hundred sixty five dollar ($665) filing fee, unless the item involves a Coastal Permit that is appealable to the Coastal Commission, in which case there is no fee.

COVID-19 ANNOUNCEMENT: This meeting will be held via teleconference ONLY.

In order to minimize exposure to COVID-19 and to comply with the social distancing suggestion, the Council Chambers will not be open to the public. The meeting may be attended remotely, using any of the following sources:

PUBLIC COMMENT:

- PRIOR TO THE MEETING: You may comment online at: http://www.cityofsantacruz.com/pc or send an email to cityplan@cityofsantacruz.com (if you wish to include attachments) during the open period: starting 7pm on 8/29 through 12pm on 9/02
- DURING THE MEETING: See instructions below for public comment upon meeting time. We recommend you call in at the start of the meeting: 7pm.

Call any of the numbers below. If one is busy, try the next one.

- +1 669 900 9128 or
- +1 346 248 7799 or

- +1 646 558 8656 or
- +1 253 215 8782 or
- +1 301 715 8592 or
- +1 312 626 6799

- **Enter the meeting ID number**: 997 3429 0059
- **When prompted for a Participant ID, press #.**
- **Press *9 on your phone to "raise your hand" when the Commission Chair calls for public comment.**
    - It will be your turn to speak when the Clerk unmutes you. You will hear an announcement that you have been unmuted. The Chair will determine the amount of the time given to speak. The Clerk will notify you of your final 30-seconds of time.
    - You may hang up once you have commented on your item of interest or be muted to stay on the line and listen to the remaining meeting.
    - If you wish to speak on another item, two things may occur:
        1) If the number of callers waiting exceeds capacity, you will be disconnected and you will need to call back closer to when the item you wish to comment on will be heard, or
        2) You will be placed back in the queue and you should press *9 to "raise your hand" when you wish to comment on a new item.

NOTE: If you wish to listen to the meeting and don't wish to comment on an item, you can do so at any time via the same instructions above.

Call to Order

Roll Call

Absent w/notification

Staff

Statements of Disqualification

Oral Communications

Announcements

Presentations

Approval of Minutes

Consent Agenda

General Business

Public Hearings

1 418, 428, 440, 504, 508 Front Street File No. CP18-015 APN(s): 005-151-22, 30, 31, 39 & 50 Coastal Permit, Non-Residential Demolition Authorization Permits, Design Permit, Tentative Map, Special Use Permit, Administrative Use Permit, Revocable License for Outdoor Extension Area, Heritage Tree Removal Permit, and Street Tree Removal to remove one street tree and three heritage trees, to combine five parcels, demolish three commercial buildings including two historic commercial buildings, and to construct a seven-story, mixed-use building with 175 residential condos and 11,498 square feet of ground floor and levee front commercial space on property located within the CBD (Central Business District)/CZ-O (Coastal Zone Overlay)/FP-O (Floodplain Overlay) zone district and within the Front Street/Riverfront subarea of the Downtown Plan. (Environmental Determination: Limited environmental review pursuant to PRC 21083.3 and CEQA 15183 & Environmental Impact Report) (Applicant: SC Riverfront LLC/Filed: 8/7/18)

That the Planning Commission recommend to the City Council certification of the Environmental Impact Report and approval of a Nonresidential Demolition Authorization Permit, Coastal Permit, Design Permit, Tentative Map, Special Use Permit, Administrative Use Permit, Revocable License for Outdoor Extension Area, Heritage Tree Removal Permit, Street Tree Removal based on the findings listed in the attached Draft Resolution and the conditions listed in Exhibit "A" of the staff report dated August 28, 2020.

Information Items

2 General Plan Zoning Ordinance Reconciliation A19-0006 Citywide

Informational Update

Subcommittee/Advisory Body Oral Reports

Items Referred to Future Agendas

Adjournment

PLANNING COMMISSION
AGENDA REPORT

DATE: August 28, 2020

AGENDA OF: September 3, 2020

ITEM NO: **CP18-0153** **418, 428, 440, 504, 508 Front St.**

RECOMMENDATION: That the Planning Commission recommend to the City Council certification of the Environmental Impact Report and approval of a Nonresidential Demolition Authorization Permit, Coastal Permit, Design Permit, Tentative Map, Special Use Permit, Administrative Use Permit, Revocable License for Outdoor Extension Area, Heritage Tree Removal Permit, Street Tree Removal based on the findings listed in the attached Draft Resolution and the conditions listed in Exhibit "A".

PROJECT DATA

Property Owner:	SC Riverfront LLC
Applicant:	Owen Lawlor
APN's:	005-151-22, -30, -31, -39, -50
Application Type:	Coastal Permit, Non-Residential Demolition Authorization Permit, Design Permit, Tentative Map, Special Use Permit, Administrative Use Permit, Revocable License for Outdoor Extension Area, Heritage Tree Removal Permit, and Street Tree Removal to remove one street tree and three heritage trees, to combine five parcels, demolish three commercial buildings including two historic commercial buildings, and to construct a seven-story, mixed-use building with 175 residential condos and 11,498 square feet of ground floor and levee front commercial space on property located within the CBD/CZ-O/FP-O zone district (Central Business District, Coastal Zone Overlay, Floodplain Overlay) and within the Front Street/Riverfront subarea of the Downtown Plan.
Zoning:	CBD (Central Business District) CZ-O (Coastal Zone Overlay District) FP-O (Floodplain Overlay District)
Project Consistency:	Consistent with zone district with approval of permits
General Plan:	RVC/Downtown Santa Cruz (Regional Visitor Commercial) Front Street/Riverfront Corridor area of the Downtown Plan
Project consistency:	Consistent with approval of permits
Land Use - Existing:	Three multi-tenant commercial buildings

- Proposed: 175-unit residential condominium building with ground-floor and Riverwalk-facing commercial space, residential amenity space, and parking garage.

Lot Area: 42,684 square feet

Environmental Review: Limited Environmental Review for projects consistent with General Plan, Community Plan or Zoning Action pursuant to Public Resources Code section 21083.3 and CEQA Guidelines section 15183. Further analysis of Biological Resources, Cultural Resources, Geology and Soils, Energy Conservation, and Land Use completed in an Environmental Impact Report (EIR), published July 27, 2020.

Associated Documents: The full Draft and Final Environmental Impact Report volumes, which together constitute the project EIR, are available for viewing on the City's website at: www.cityofsantacruz.com/ceqa
Associated project reports are available for viewing at: https://www.cityofsantacruz.com/government/city-departments/planning-and-community-development/active-planning-applications-and-status/front-st-riverfront-apartments

Planning Staff: Samantha Haschert

SITE DESCRIPTION

The project site is located on the east side of Front Street between Front Street and the San Lorenzo River. The site has approximately 423 feet of frontage on the street and generally spans the area between the terminus of Cathcart Street and the Downtown Metro Center. The site is zoned CBD (Central Business District)/FP-O (Floodplain Overlay District)/CZ-O (Coastal Zone Overlay District) and is designated as RVC (Regional Visitor Commercial, Downtown Santa Cruz) in the General Plan. The site is surrounded by parcels with the same zoning and general plan designations to the north, west, and south that are developed with commercial and mixed use buildings and uses, with the exception of the Metro Transit District which is located on a parcel zoned for Public Facilities (PF). The San Lorenzo River is located to the east. All five of the existing parcels have frontage on Front Street and back-up to the San Lorenzo River to the east. The Riverwalk is located at the top of the levee which is approximately 10-feet above the grade of Front Street. All of the existing buildings in the project site area are single-story.

The parcels at 418 and 428 Front Street are located within the appealable area of the Coastal Zone (CZ-O) but are outside of the Shoreline Protection Overlay Area (SP-O). The other parcels within the project site are not located within the mapped Coastal Zone Overlay; however, because the project includes a combination of the five parcels and the development is being proposed as a single development over all five properties, approval of a Coastal Permit is required for the project.

The entire project site is also located within the Downtown Plan area, within the Front Street/ Riverfront Corridor and within Additional Height Zone B, which allows for building heights up to seventy feet under specific conditions. The applicant is requesting to construct a 77'9" tall building using State Density Bonus Law which allows for incentives and concessions to development standards when affordable housing thresholds are met. Further analysis of Density Bonus request is provided in the Analysis section below.

The site is mapped as sensitive for archaeological resources and an Archaeological Report was prepared for the project by Basin Research Associates on August 13, 2018. The report concludes that the project site has a low sensitivity for both prehistoric and historic archaeological materials and there appears to be a low potential for exposure of significant historic resources and/or unique archaeological sites during ground disturbing construction. As such, the report does not recommend project redesign, capping, or additional archaeological testing or monitoring during ground disturbing construction. The report does recommend that the standard condition of approval is included to require stopping of work and reporting in the event of an unexpected discovery.

The project site is shown in yellow below.

For illustrative purposes only.

BACKGROUND

The project includes the demolition three existing buildings on the site, none of which are listed in either the National Register of Historic Places (NRHP) or the California Register of Historic Resources (CRHR). None of the buildings are identified as an individual landmark, and the project site is not within any historic districts; however, two of the buildings were identified as historically significant structures in 2009 with the preparation of Volume III of the City's Historic Building Survey but were not formally listed. In 2009, Department of Parks and Recreation Form 523's (DPR's) were prepared for both properties by Archives & Architecture LLC as part of a building survey associated with the preparation of Volume III of the City's

Historic Building Survey. The DPR's concluded that the building at 418 Front Street was constructed circa 1925 and that the property at 428 Front Street was constructed circa 1948. Both buildings are currently filled by commercial tenants, including the 418 Project, a movement arts center, and University Copy Services. The proposed demolition requires an increased level of review under the California Environmental Quality Act (CEQA) and an EIR was prepared to evaluate the cultural impacts of the project. The EIR is described in further detail under the section below titled Environmental Review. Additionally, the proposed demolition requires review by the Zoning Administrator and recommendation of action to the City Council pursuant to section 24.08.1210 of the zoning ordinance; however, the Zoning Administrator referred this action to the Historic Preservation Commission (HPC).

On August 5, 2020, the HPC considered the proposed demolition at a noticed public hearing. The HPC discussed the litany of long-standing city goals that would be implemented by the development as well as the need for the preservation of historic buildings. The HPC considered public testimony submitted and indicated that they would like to see greater consideration of historic buildings in preliminary design discussions for new development. After reviewing the details of the Environmental Impact Report and after considerable deliberation, the HPC voted 5-1-1 to recommend that the City Council certify the Environmental Impact Report and approve the demolition of the buildings with a condition that the front facades of the historic buildings are replicated on the ground floor of the new building facing Front Street. The HPC recognized that the recommendation for replication would not be consistent with the Secretary of the Interior's Standards for the Treatment of Historic Buildings; however, the majority of the commission felt that replication, in addition to the mitigation measure for the establishment of an interpretive display on the site, was an appropriate balance between historic preservation and the development of the project.

PERMITS REQUIRED

The project requires the following permits:

- **Non-Residential Demolition Authorization Permit:** to demolish three commercial structures. (Section 24.08.1210)
- **Tentative Map:** to divide the property into 175 condominium units, common area, and eight commercial spaces.
- **Special Use Permit:** to construct greater than 60 residential units in the Front Street/Riverfront Corridor subarea of the Downtown Plan Area, to allow for outdoor eating areas, and to allow for the proposed outdoor extension area. (Downtown Plan & Sections 24.12.190 & 24.12.192)
- **Administrative Use Permit:** to allow for: 1) co-working spaces facing the Riverwalk and a Leasing Office on Front Street; 2) a combined public/private fitness studio and dance school on Front Street; 3) Riverwalk retail as an "upper floor" use facing the Riverwalk; and 4) to allow for an instructional school (418 Project) not located on Pacific Avenue or on an east-west street.
- **Design Permit:** to construct a mixed-use structure greater than 50 feet in height in Additional Height Zone B (24.08.410(1) and Downtown Plan)

- **Coastal Permit:** to construct an 188,694 square-foot, mixed-use building in the appealable area of the Coastal Zone.
- **Revocable License for Outdoor Extension Area:** to utilize public city property adjacent to the Riverwalk for outdoor seating associated with a private use. (Section 24.12.192)
- **Heritage Tree Removal Permit and Street Tree Removal Approval:** to remove three heritage trees and one non-heritage street tree per Chapter's 9.56 and 13.30 of the Municipal Code.

PUBLIC OUTREACH

The project is considered to be a "significant" project under the City Council's approved Community Outreach Policy for Planning Projects. The project required a community meeting with an increased noticing radius from 300 feet to 1,000 feet from the property lines, and a dedicated project webpage. The community meeting was held on July 1, 2019 and was noticed with signs posted on the property, mailed notices to property owners and tenants within 1,000 feet of the project site, and an advertisement in the Santa Cruz Sentinel. The community meeting was attended by the project development team, several City staff members, and about 26 members of the public. Formal comments were submitted by the public at the community meeting, and City staff noted key issues raised during the meeting. In addition to the community meeting, a project webpage was created and posted to the City of Santa Cruz website and allows for members of the public to submit comments to the project planner.

In addition to the community meeting, the city webpage, and on-site noticing, a public scoping meeting was held on December 4, 2019 to identify potential project-specific impacts that should be considered in the Environmental Impact Report (EIR).

The following key issues/concerns were raised by members of the public during the above described outreach methods:

- Management/programming of the proposed public outdoor space at the levee – See Outdoor Extension Area Section of this report.
- Affordable housing – See Affordable Housing and Density Bonus Section of this report.
- Targeted population for residences – Unknown to City.
- Development in flood zone – See Flood Zone Development section of this report.
- Feasible relocation of the 418 Project – See Zoning/General Plan Consistency and Uses section of this report.
- Construction impacts adjacent to the river – See EIR Section 4.3
- Impacts to riparian habitat along the river – See EIR Section 4.1
- Building size and density not appropriate for Santa Cruz – See Minimum Lot Size/Density/FAR section, Building Height section, Design section, and Density Bonus section of this report.
- Bike Access through pedestrian passageways – See Bike Access Section of this report.
- Relocation of the 418 Project – See the Uses Section of this report.

In addition to these concerns, staff received many comments in support of the location, density, and design of the project. Public comments received are included as an attachment to this report, and comments received as a part of the CEQA review process are included in the Draft EIR and Final EIR.

ANALYSIS

The proposal is to construct a seven-story, 188,694 square foot, mixed-use building with 175 residential condominiums and 11,498 square feet of ground floor and river-facing commercial space on property within the CBD/CZ-O/FP-O zone district and within the Front Street Riverfront Corridor of the Downtown Plan. The intent of the developer is to map the residential units as condominiums but to maintain single ownership and rent the units for the near future.

Zoning/General Plan/Downtown Plan Consistency

The project site is designated as RVC/Downtown Santa Cruz (Regional Visitor Commercial) in the General Plan and is located within the CBD (Central Business District) zone district. The entire project site is located in the Front Street Riverfront Corridor of the Downtown Plan. The RVC/Downtown Santa Cruz General Plan designation is intended to emphasize a mix of uses such as office and retail uses, residential and mixed-use developments, restaurants, and visitor attractions, and the CBD zone district is a zone that is intended to implement the objectives of the Downtown Plan. The proposed use of the parcel as a mixed-use commercial/residential project is consistent with the intent of the CBD zone district and the RVC/Downtown Santa Cruz designation, and the proposal to fill the area between the building and the San Lorenzo River levee to expand the Riverwalk area and create additional public open space that highlights the river as a downtown amenity is consistent with the following goals and policies of the General Plan, the Local Coastal Program, the Downtown Plan, and the San Lorenzo Urban River Plan (SLURP):

GENERAL PLAN AND LOCAL COASTAL PROGRAM 1990-2005

- GOAL EQ 1: Protect City residents from the health hazards of air pollution and maintain high air quality standards by implementing air quality monitoring and control strategies that comply with State and Federal Clean Air Acts.
- GOAL EQ 2: Protect water quality of ocean, watershed lands, surface waters and ground water recharge areas from sedimentation, pollution, and salt-water intrusion
- GOAL EQ 5: Implement, to the greatest degree possible, transportation strategies that reduce the consumption of fossil fuels, and energy strategies that increase energy-efficiency and energy conservation in all sectors of energy usage and which increase the production and use of renewable energy sources within the City.
- GOAL L2: Provide for a variety and balance of residential, commercial, and industrial land uses while protecting environmental resources and responding to changing community needs, interests, and development constraints.
- GOAL L3: Protect the quality of, and prevent significant new incursion of urban development into, areas designated as open space or agricultural lands and provide, when possible, permanent protection of these lands, recognizing their value in inhibiting urban

sprawl and maintaining City identity, as a natural resource with significant biotic resources and/or their potential for providing scenic, recreational and educational enjoyment.

- GOAL L4: Plan community facilities and services to serve the projected population, allowing development only when adequate facilities and services are provided and are available to serve it.
- GOAL L5: Develop compatible relationships between land-use and circulation patterns and encourage land use patterns that encourage an efficient transportation system and discourage urban sprawl and excessive dependence on the automobile.
- GOAL CD2: Protect and enhance the City's natural setting and scenic resources.
- GOAL C1: Develop a comprehensive, multi-modal circulation planning program that takes as its highest priority reduction of automobile trips by the creation of viable alternative transportation modes, effective transportation systems management programs, and integration of land-use and circulation planning.
- GOAL C2: Develop and promote pedestrian travel as a viable transportation mode by developing and maintaining a safe, comprehensive, convenient, accessible and aesthetically pleasing pedestrian system.
- GOAL ED4: Promote revitalization of the Downtown Central Business District as the City's center for commerce, office, culture, entertainment restaurant activity, and mixed use residential.
- GOAL PR2: Ensure that adequate types, numbers and distribution of recreational facilities are available to residents of Santa Cruz.

GENERAL PLAN 2030:

- HA1.11.6 Consider historic preservation in the development and enforcement of City regulations.
- CD1.1.4 Identify and emphasize distinguishing natural features that strengthen Santa Cruz's visual image (i.e., open space, Monterey Bay).
- CD1.4.2 Consider visual access to nearby natural areas as part of developmental review.
- CD1.5.1 Enhance the prominence of the San Lorenzo River as a natural feature that provides structure, orientation, and recreational enjoyment by including it in surrounding area and management plans.
- CD1.5.2 Provide incentives for new development adjacent to the San Lorenzo River that includes patios overlooking the river, enhanced connections to the levee trails, and other design features that connect the built environment to the river.
- CD3.1.1 Strengthen the linkage between Downtown, the Beach Area, and San Lorenzo River through amendments to corresponding Area Plans and the Zoning Ordinance.
- CD3.1.2 Maintain, update, and implement the City's San Lorenzo Urban River Plan.
- CD3.3.1 Develop incentives to encourage the assembly of small parcels through Area Plan amendments and Zoning Ordinance changes.
- CD3.3.2 Revise the Zoning Ordinance to limit development possibilities for small parcels.
- CD4.1.3 Identify and establish design concepts that make visitor-serving corridors attractive and interesting through landscaping, banners, flags, art, and displays.
- CD4.2.3 Underground utilities when major road improvement or reconstruction is proposed, if possible.

- CD4.3.3 Protect existing significant vegetation and landscaping that provides scenic value along with wildlife habitat and forage.
- CD4.3.4 Maintain an ordinance requiring replacement and maintenance when heritage tree removal is necessary for new development.
- CD4.3.6 Implement streetscape and other landscaping plans in the City's Area and Specific Plans.
- CD5.2.1 Encourage buildings to be oriented towards sidewalks, public plazas, walkways, or rivers and to include features such as public benches and natural seating areas.
- CD5.2.2 Encourage the incorporation of public benches and natural seating areas along public walkways and in public plazas and parks.
- CD5.2.4 Ensure that new and revised design guidelines encourage the use of pedestrian-scaled fenestration, awnings, entrances, landscaping, and other amenities.
- LU 1.1.2 Create incentives for the consolidation of underdeveloped parcels relative to development potential.
- LU1.2.1 Environmental review for specific projects shall be accompanied by sufficient technical data and reviewed by appropriate departments.
- LU2.3.1 Protect, maintain, and enhance publicly accessible coastal and open space areas.
- LU3.1.1 Encourage through incentives and expedited permit processing a variety of housing types, when appropriate.
- LU3.3.1 Amend the Zoning Ordinance to discourage strip commercial development in favor of clustered commercial and mixed-use development along transit corridors.
- LU3.7.1 Allow and encourage development that meets the high end of the General Plan Land Use designation density unless constraints associated with site characteristics and zoning development standards require a lower density.
- LU3.11.2 Ensure appropriate land uses and development standards that do not adversely impact adjacent open spaces.
- LU4.1.1 Support compact mixed-use development Downtown, along primary transportation corridors, and in employment centers.
- M1.1.1 Create walkable, transit-oriented activity centers throughout the city.
- M1.1.2 Connect activity centers with pedestrian and bicycle paths.
- M1.1.3 Implement pedestrian and bicycle improvements that support transit ridership.
- M1.4.2 Allow for future multi-modal use of future rights-of-way by protecting them from development.
- M2.1.2 Encourage use of alternative modes of transportation.
- M2.3.1 Design for and accommodate multiple transportation modes.
- M3.1.1 Seek ways to reduce vehicle trip demand and reduce the number of peak hour vehicle trips.
- M4.1.6 Enhance the pedestrian orientation of the Downtown Central Business District.
- M4.1.7 Require the site and building design facilitate pedestrian activity.
- M4.1.9 Require landscaping in the development, replacement, and repair of sidewalks, including the placement of trees on private property and/or in tree wells on sidewalks.
- ED1.1.6 Revitalize the Riverfront area.
- ED1.7.2 Diversify the range of visitor attractions in Santa Cruz, particularly those that draw on the city's unique natural and cultural assets.

- ED5.1.1 Provide for the development of supporting land uses adjacent to retail shopping areas, while assuring protection of existing residential neighborhoods.
- ED5.3.1 Provide for attractive commercial development (including more intensive and higher quality ground floor retail) along commercial corridors provided the uses are compatible with or transition easily to adjacent residential areas.
- ED5.5.1 Enhance Downtown as a welcoming and inviting destination for residents, visitors, and businesses.
- ED5.5.4 Create a distinctive and active pedestrian environment downtown
- ED5.5.5 Allow for the extension of café and retail uses within the public right-of-way, subject to design standards and management guidelines.
- HZ6.4.8 Minimize the alteration of natural floodplains, stream channels, and natural protective barriers that accommodate or channel floodwaters.
- PR1.1.3 Evaluate all lands, regardless of size, for their potential development as small parks, community gardens, or landscape lots.
- PR1.6.1 Maintain and enhance access for vehicles, transit, bicycles, and pedestrians.
- PR2.2.2 Encourage private sponsorship of special events and programs, historic events, joint projects, and cultural exchanges that involve and benefit the community.
- PR3.1.1 Provide recreational and educational opportunities within the open space lands and coastline consistent with adopted master or management plans.
- PR4.1.3 Maintain and enhance the recreational value of the San Lorenzo River walkway and the East and West Cliff Drive pathways
- NRC1.1.2 Where consistent with riparian and wetland protection, provide actual or visual access of a low-impact nature
- NRC1.1.1 Require setbacks and implementation of standards and guidelines for development and improvements within the city and adjacent to creeks and wetlands as set forth in the Citywide Creeks and Wetlands Management Plan.
- NRC1.3.1 Conserve creek, riparian, and wetland resources in accordance with the adopted City-wide Creeks and Wetlands Management Plan and the San Lorenzo River Plan.
- NRC2.2.1 As part of the CEQA review process for development projects, evaluate and mitigate potential impacts to sensitive habitat (including special-status species) for sites located within or adjacent to these areas.

DOWNTOWN PLAN FIRST PRINCIPALS

- Form and Character. New buildings should be allowed to develop individual character while retaining qualities of the historic townscape. Issues of articulation, materials, signage, setbacks, scale, massing, form, bulk, solar access and height are critical.
- Building Height. Buildings should maintain the scale and character of the existing downtown, with explicit criteria for additional height up to seven stories and provisions to ensure that buildings do not shade key public open spaces. Since this First Principle was established in 1991, the downtown development pattern has largely respected the existing two to three story development pattern with several taller buildings spaced throughout the Pacific Avenue Retail District, providing architectural variation. The 2017 update recognizes these taller buildings also contribute greatly to the architectural fabric of the City and can provide significant opportunities to plan for environmentally sound infill development

without damaging the character of the City. The 2017 modifications to the Additional Height Zones have been carefully written to recognize the City's successful recovery from the 1989 Loma Prieta earthquake; preserving and enhancing the urban form of the City, without sacrificing the special human scale and character of downtown. New development will not be required to strictly adhere to a 2 and 3 story scale.

- Housing. Significant new housing opportunities should be targeted throughout the downtown, including Pacific Avenue, the San Lorenzo riverfront, and South of Laurel. Housing should be comprised of a mix of apartments and condominiums. SRO housing should be replaced and dispersed throughout the downtown area.
- Accessibility. A downtown that aesthetically integrates access as a primary design criterion for all improvements to ensure increased opportunities for the public to participate in commercial, governmental, residential, social and cultural activities.
- Open Space and Streetscape. A strong network of public and private open spaces (streets, sidewalks, public parks, plazas, passageways and courtyards) that creates a socially active and pedestrian-oriented downtown core should be emphasized.
- Circulation. Downtown should be predominantly pedestrian in nature; movement should be carefully structured to reinforce the character of the place. Pedestrian, bicycle, and transit access to the downtown should be enhanced.
- Parking. Parking in the downtown core should continue to be provided by the Parking District in a centralized fashion, to maximize shared use and minimize the quantity of stored vehicles.

SAN LORENZO URBAN RIVER PLAN (SLURP)

- Improve the scenic and recreational value of the Riverfront
- Improve public access and pedestrian/bicycle movement to and along the River
- Improve the urban and neighborhood interface with the San Lorenzo River, Branciforte Creek, and Jessie Street Marsh
- Incorporate the San Lorenzo River, Branciforte Creek, and Jessie Street Marsh into the surrounding urban fabric of downtown and neighborhoods.
- (Front Street – Significant Riverfront Areas (SRFA))
- SRFA-1: Require new development projects to incorporate design features that encourage active engagement with the Riverwalk such as; filling adjacent to the Riverwalk and landscaping, providing direct physical access to the Riverwalk, including appropriate active commercial and/or residential uses adjacent to the Riverwalk or providing a combination of these and/or other design features that support the resource enhancement and river engagement policies of the San Lorenzo River Plan.
- SRFA-2: Require new development projects to incorporate pedestrian and/or bicycle connections between Front Street and the Riverwalk at appropriate locations such as the extensions from Maple Street and near Elm Street.
- SRFA-3: Maintain the ten-foot setback area between residential and commercial uses adjacent to the levee trail from the western edge of the trail. The area between the property line and the Riverwalk shall be filled to raise the adjacent ground-level use to a similar or higher elevation as the Riverwalk. The public lands between the Riverwalk and the private property may incorporate publicly accessible commercial or residential amenities, such as outdoor public seating. Trees planted as part of the San Lorenzo Flood Control Improvement

Project should be maintained and incorporated into new development where feasible and where not in conflict with the required fill or publicly accessible amenities.

Housing Blueprint – Downtown Housing Creation

- Focus City resources and staff to encourage construction or approval of units downtown with a specific focus on enabling projects in the current development pipeline to break ground.

City Council Two Year Workplan July 2017-June 2019

- Strategic Goal 1, Focus Area 4 – Downtown Projects: Approve 500-600 housing units in downtown.

Minimum Lot Size/Density/FAR

The proposal is to combine five parcels to result in a 42,684 square foot lot, which is greater than the minimum lot size of 5,000 square feet in the CBD zone district. There is no density range specified in the CBD zone district or in the Downtown Plan; however, the project site is subject to a Floor Area Ratio (FAR) range of 2.5 – 5 for the RVC/Downtown Santa Cruz General Plan designation. The proposal is to construct a 188,694 square foot building on a combined lot area of 42,684 square feet which results in a FAR of 4.4, which is at the high end of the permitted range and is in accordance with General Plan Policy LU3.7.1.

The application includes a request for a Density Bonus, therefore, it was necessary to determine the base density of the project site for the purposes of applying a Density Bonus. The applicant prepared base density plans, which reflected a fully-conforming mixed-use development at the project site and which established that the site can support a project with 133 residential units. The requested Density Bonus and Inclusionary Housing requirements are described below in the Affordable Housing section of this report.

Setbacks

The Downtown Plan requires that all new development within the Front Street/Riverfront Corridor is constructed to the property lines. There are exceptions that allow for generous landscaping at gateway areas, recessed areas, step-backs, and articulation (bay windows, balconies, architectural features, etc.) to break up building mass and that allow for the construction of full 12-foot wide sidewalks to be provided along Front Street. Development is encouraged along the property line at the Riverwalk side of the property as well. The proposal is to construct the building without a hard edge along the Front Street and Riverwalk property lines by incorporating slightly projecting and recessed architectural elements on each building face. These features include recessed storefronts and substantial archways and columns along the ground-floor, and balconies and variations in building wall on the upper floors. The only upper floor projections are the Front Street facing balconies that are consistent with the Downtown Plan in that they do not encroach greater than three feet over the public right-of-way. No portion of the buildings will encroach over the property line along the Riverwalk.

Uses

The project site is located within the Front Street/Riverfront Corridor, which is a subdistrict of the Downtown Plan area. The Downtown Plan describes the Front Street/Riverfront Corridor as

an area in need of redevelopment into a transitional area between the intensive commercial core along Pacific Avenue and the recreational resources provided by the San Lorenzo River. The plan encourages active ground-level uses such as retail and restaurants adjacent to Front Street, and upper floor residences and offices that take advantage of river viewsheds.

The proposal is to construct three mixed-use buildings that will be connected by ground floor and basement-level parking, and, in total, the development will include:

- Five ground-floor commercial tenant spaces and a leasing office/lobby facing Front Street;
- Three large commercial tenant spaces facing the Riverwalk in addition to three residential condos elevated five-feet above grade, and residential amenities including a game room, lounge, and fitness area.

Table 4-1 in the Downtown Plan identifies permitted ground level uses in the Front Street/Riverfront Corridor and Table 4-1 in the Downtown Plan identified permitted uses along the Riverwalk. There are some anticipated uses proposed as a part of the project that require the approval of Use Permits:

- The project includes a leasing office as ground floor uses along Front Street. The use is consistent with the criteria established in the Downtown Plan in that the use is not located along Pacific Avenue or within 75 feet perpendicular to Pacific Avenue; the use is compatible with planned ground level commercial uses and upper level residential uses in that the leasing office will directly serve the development, and the building meets the requirements in the Downtown Plan for storefront and building façade guidelines and is capable of being transformed to retail space in the future.
- The applicant indicates that they are in discussion with the owners of the 418 Project to relocate the business to the largest commercial space facing Front Street (Commercial Space C). The agreement has not been finalized; however, this permit includes a request for an Administrative Use Permit to allow for the dance performance center to be located along Front Street in the event that the business is relocated. The space is located on Front Street and is therefore not subject to the criteria in the Downtown Plan for instructional schools along Pacific Avenue or east-west street frontages. The instructional school is an appropriate use along Front Street in that the activity within would provide interest and enjoyment to pedestrians and would preserve a local business that is an established part of the community.
- The project includes a co-working space at the Riverwalk that would be provided as an amenity space for residents and would be made available to members of the public. This use is Principally Permitted in the Downtown Plan and is consistent with the criteria that the use will be compatible with ground and upper level planned uses in that the office space will serve residents and members of the public.
- The project includes a combined public/private fitness studio at the Riverwalk level that is intended to be provided as an amenity to residents and available to the public to rent for private fitness classes. The use is consistent with the criteria for Health/Fitness Studios in the Downtown Plan in that the proposed private/public use is consistent upper level residential uses.

The remaining, undefined commercial spaces will be designed and constructed to allow for food and drink service uses in addition to retail, and the applicant indicates that the commercial spaces are intended to be filled by businesses that are open to the public, that can take advantage of connected outdoor areas, and that have an active and engaging presence on the street and sidewalk. These types of uses and outdoor areas are highly encouraged for areas within the Downtown Plan and along the Riverwalk and are consistent with various goals and policies in the Downtown Plan for the development of the Front Street/Riverfront Corridor, including the Planning Principals and Strategies. Pursuant to Table 4-2 of the Downtown Plan, a tenant will be required to obtain approval of an Administrative Use Permit prior to the establishment of a retail use along the Riverfront to ensure that the use is consistent with the goal to activate the Riverwalk and to determine if the use will be compatible with surrounding residential and commercial uses.

Residential units as upper floor units are permitted and encouraged in the Front Street/Riverfront subarea of the Downtown Plan and adjacent to the Riverwalk as desirable uses. Specifically, the plan states, "Along Front Street, between Soquel Avenue and Laurel Street, the Downtown Plan promotes upper level residential uses, while encouraging commercial uses at the ground level facing Front Street and a mix of commercial and residential uses at the Riverwalk level and above." The residential units facing the Riverwalk comply with the requirements of the Downtown Plan in that they are elevated five feet above the grade of the Riverwalk and there are no entrances to the units facing the Riverwalk. Staff is supportive of the three residential units along the ground level of the Riverwalk because there is a mix of other uses that provide a greater level of activity that encourages pedestrian interest.

The Additional Height Zone of the Downtown Plan also includes goals for upper level residential uses and ground-level commercial uses along Front Street and specifically states, "The City also wishes to promote uses that foster activity and a sense of stewardship, allowing the area to evolve from a service district to an integral part of the overall downtown. In order to achieve this goal, residential uses are considered highly desirable upper-level uses, with active commercial and people-oriented uses at Front Street level."

Building Height

The entire project site is located with "Additional Height Zone B," which is a designation in the Downtown Plan that allows for buildings to exceed the maximum base height of 50 feet and three stories above ground floor commercial. The project site is between 15,000 and 50,000 square feet, therefore the project is eligible for a maximum height of 70 feet and five floors above required ground floor commercial. This specific area of Additional Height Zone B allows for buildings up to six-stories and 70 feet in height subject to specific criteria that are intended to "promote the appearance of multiple buildings of varying heights and to avoid the creation of large, monolithic buildings." The Downtown Plan also provides development standards such as building stepbacks, street frontage limitations, material, fenestration, and/or plane changes, and other horizontal and vertical design variation standards to absorb the height and mass of the building and to create a compatible relationship between adjacent buildings and the pedestrian environment. The proposal is to construct a seven-story, 77'9" tall building, which is greater than the six-story, 70 foot maximum height limit permitted in Additional Height Zone B, and the

applicant is requesting the additional height above 70 feet and six stories as an waiver associated with the Density Bonus request, which is further described below in the Affordable Housing Section.

The project is eligible for additional height in Additional Height Zone B in that the aggregate parcel size is greater than 15,000 square feet, the project site contains greater than 100 feet of frontage on Front Street, and the project is eligible for a density bonus. The project is consistent with the Additional Height Criteria for Approval provided in Section 4.H.2.b of the Downtown Plan in that:

- The additional height allows for additional housing units to be provided downtown, consistent with the First Principals of the Downtown Plan and lending to the concentration of new housing in a transit priority area.
- The development has been designed as three separate buildings to promote the appearance of a grouping of buildings rather than one monolithic building.
- The development includes the construction of two pedestrian passageways that will provide high-quality access between the downtown commercial core and Front Street to the Riverwalk.
- The project will achieve the following key community objectives: the addition of publically-accessible open space adjacent to the Riverwalk; affordable housing; a variety of different sized commercial spaces that can provide incubator space for small businesses; and Transportation Demand Management concepts.

The project is consistent with the Performance Criteria for Building Recessed Breaks in the Additional Height Zone B as described below:

- Building Recessed Breaks: In order to promote the appearance of multiple buildings, Additional Height Zone B requires developments to provide separations or breaks that are open to the sky and that are a minimum of 15 feet wide by 10 feet deep. The proposed project provides two pedestrian passageways that are 60 feet wide and 30 feet wide, respectively, and that are open to the sky and effectively create a clear separation between buildings.

The project is not consistent with the Performance Criteria for Skyline Architectural Variation in the Additional Height Zone B as described below:

- Skyline Architectural Variation: To promote skyline variation, the top floor of the building shall not exceed 60 percent of the floor area below or 60 percent of the building length as measured along Front Street or the Riverwalk. The project is not consistent with these requirements as shown in the table below:

North Building		
Required	**Proposed**	**Complies?**
Max. 7th floor Floor Area = 2,776.80 (6th floor FA= 4,628)	4,628 sq. ft. (100% of floor below)	No
Max. 7th floor building length = 36 feet (Bldg length = 60 feet)	49 feet (81% of building length)	No

Middle Building		
Required	**Proposed**	**Complies?**
Max. 7th floor Floor Area = 6,382 (6th Floor FA= 10,639)	8,681 sq. ft. (81.5% of floor below)	No
Max. 7th floor building length = 96 feet (Bldg length = 160 feet)	142 feet (88% of building length)	No

South Building		
Required	**Proposed**	**Complies?**
Max. 7th floor Floor Area = 5,104 (6th Floor FA= 8,507)	6,969 sq. ft. (81% of floor area)	No
Max. 7th floor building length = 84 feet (Bldg length = 140 feet)	130 feet (92.8% of building length)	No

The Downtown Plan says that: "Variation to the 60% floor area standard can be considered for projects that incorporate publicly accessible pedestrian connections to the Riverwalk." In this way, the code recognizes that a significant portion of the potentially developable area of a site is dedicated to a community serving improvement, and the plan allows for variations to these standards. The proposed project includes two pedestrian passageways which will meet the goals and policies in the General Plan, the Downtown Plan, and the San Lorenzo Urban River Plan, to connect the Riverwalk to the downtown core and to Front Street and to highlight the river as a natural urban amenity. For these reasons, the proposal to exceed the maximum top floor area and length are supported.

Riverwalk Extension Areas
The project includes fill between the building wall and the levee to expand the area at the top of the levee and adjacent to the Riverwalk to create more usable open space overlooking the river. The fill structure requires approval of a Section 408 permit by the Army Corps of Engineers, and while the permit application has been submitted, it has not yet been approved. A condition of approval is included that requires the applicant to submit evidence of permit approval prior to issuance of a building permit for any site disturbing activities.

The expanded area is currently and will continue to be located on city-owned property. Conditions of approval are included that require the applicant to obtain an easement over the fill structure for the maintenance of the structure and improvements within. For the improvements at the top of the levee, the property owner of the subject development will also be required to enter into a revocable license agreement with the city that will allow for the continued use of the property and that will establish the responsibilities for maintenance and public access. There are no specific activities or events proposed within the Riverwalk extension area as a part of this

project; however, these can be considered later through the use of Entertainment Permits. Conditions of approval are included that address lighting conditions, landscaping, and noise within the expanded Riverwalk area.

Design

The Downtown Plan provides specific development criteria for buildings over 50 feet in height, which is discussed in detail in the Building Height section above. The following analysis specifically addresses the proposed exterior design of the building which can also affect building massing.

The project consists of three buildings that are separated by two pedestrian passageways of 60 feet and 30 feet, respectively, and that are connected by an underground and at-grade parking garage. The buildings employ three architectural styles that provide differentiation to result in the look of three individual buildings but that are compatible and provide a unified appearance. The building massing steps back at the pedestrian passageways and at the front and rear elevations to reduce the perceived height of the building from the pedestrian view. Additionally, the proposed exterior design provides large commercial storefront assemblies at the ground level along Front Street and facing the Riverwalk to allow for transparency within the commercial or amenity spaces that will provide interest to pedestrians and encourage the movement of shoppers east from the downtown core to the Riverwalk. Exterior materials include plaster finishes, cementitious siding, and metal siding with accents of brick veneer, wood and steel balcony railings, and metal awnings. The proposed exterior colors are natural including sand and white with yellow and blue accents. The exterior materials are used consistently between the three buildings but are arranged differently to create separate identities.

As described above, the Historic Preservation Commission (HPC) voted to approve the demolition of two historic buildings to accommodate the development but also recommended that the front façades, or elements of the front facades of the historic buildings, are replicated onto the front façade of the new buildings. The developer has reviewed the historic evaluations prepared by the project historian and has chosen to replicate most of the primary historic characteristics of each building on the front facades including the facade's stepped cornice, curved parapet, and art deco detailing on the building at 418 Front Street and the streamlined horizontality and tile accents on the building at 428 Front Street. No design changes are proposed on the upper floors. As described by the HPC, the replicated facades do not meet the Secretary of the Interior's Standards for the Treatment of Historic Buildings but will provide a visual example of the demolished buildings that will enhance the interpretative display (See Figures 1 and 2 below).

Consistent with the Downtown Plan, the ground level design at Front Street and the Riverwalk provides areas of recess, substantial support columns, outdoor plazas, and transparency into commercial and amenity space to create a humanistic scale and warmth that will be experienced by pedestrians. The expanded Riverwalk area will provide for an area for lively future outdoor gatherings that overlook the San Lorenzo River as a natural amenity. The addition of residential units facing the Riverwalk will provide eyes on the levee and views of the river that will enhance the security of the Riverwalk.

Figure 1: 428 Front Street replication:

Figure 2: 418 Front Street replication:

The Downtown Plan and the Zoning Ordinance contain bird-friendly design guidelines that were developed as mitigation measures for impacts to sensitive species in the Downtown Plan EIR (Mitigation 4.3-2). The proposed design does not include areas of mirrored or reflective glass and there are no transparent skyways or walkways proposed which could result in bird impacts. The general notions of bird-friendly design indicate that the most common bird-impact areas occur in the first 40 feet of building height where there are large expanses of glass, particularly that reflect trees or other landscaping. Uplighting/spotlighting at landscaped areas are also known features that encourage bird strikes. The building will have frontage on the river and the proposed windows on the east wall could potentially reflect the riparian vegetation or the open space of the river area. Conditions of approval are included that require the use of bird-safe, ultraviolet, and/or patterned glass, or other material or method proven to discourage bird strikes, at the windows and balcony railings on the east wall of the building up to 40 feet in height with the exception of ground floor glass. Fritting, patterns, or other bird-safe designs may not be compatible for the first-floor given that visibility into the building is key to provide pedestrian interest and/or commercial viability. Furthermore, at this location, the first floor is unlikely to reflect open space or riparian vegetation, certainly to a much lesser extent than upper floors. Conditions of approval are also recommended that prohibit the use of uplighting or spotlights in the landscaped areas and adjacent to the Riverwalk.

Design and Development Variations

The Downtown Plan provides development standards and design guidelines for the Front Street/Riverfront Corridor, the Additional Height Zones, and all CBD zone district areas. The Downtown Plan also recognizes that the plan can never address or respond to all development scenarios and circumstances, thus it provides a Design Variation process by which an applicant can propose an alternative to the requirements. The Downtown Plan describes these as "slight variations" that must be minor in nature, must better achieve stated Plan and community objectives, and must receive a positive recommendation from the Planning Director with final approval by the City Council. The applicant is proposing one such variation to the following requirement:

> *Chapter 4, Section E.5(b): Pedestrian Focus. Such publicly accessible connections shall be predominantly pedestrian in nature and located within 50 feet of the Front Street intersections at the terminus of Cathcart Street and the extensions of Maple and Elm Streets. In addition to the pedestrian access, bicycle access shall be provided at the extension of Elm Street, which will serve as the primary bicycle access to the Riverwalk between Soquel Avenue and Laurel Street.*

As described above, the project includes two pedestrian passageways between Front Street and the Riverwalk. The passageways meet the minimum widths required by the Downtown Plan and the northernmost passageway is located at the terminus of Cathcart Street which is also required by the Downtown Plan. As noted in the requirement above, the southernmost passageway is intended to provide a future extension of Elm Street and is therefore required to be within 50 feet of the future extension of Elm Street. The proposed design locates the southernmost pedestrian passageway between 80 and 100 feet from the future extension of Elm Street. This location is not consistent with the Downtown Plan requirements; however, the location is favorable to the

design because it more effectively breaks up the building mass into three separate buildings. If the passageway was relocated 30 feet to the south to the otherwise required location, the building mass would be shifted to the center building, creating a larger building mass along Front Street and a much narrower building south of the passageway with little to no room for ground floor commercial space, given the location of the driveway to the parking garage. The proposed design results in a more desirable balance of the sizes of the buildings and allows for the ground level of all three buildings to include sufficient ground floor commercial spaces. The Planning Director has reviewed the project design and recommends approval of the Design Variation to the City Council due to the advantages associated with the proposed location of the southernmost passageway.

Affordable Housing and Density Bonus

The project is a mixed-use development with greater than five residential units and includes a request for a density bonus; therefore, the required number of affordable units and level of affordability is dictated by a combination of the Inclusionary Housing requirements in Section 24.16.020(4) of the Zoning Ordinance and the affordability requirements for Density Bonus eligibility. As described above, there is no density range in the Central Business District (CBD) where the project site is located, so the base density was determined by developing plans for a fully conforming development, recognizing that the site development standards such as maximum building height, Floor Area Ratio, and required stepbacks limit the size of a development and the number of units within, in a similar way as a density range. The base plans concluded that the project site could support a maximum of 133 residential units above ground floor commercial given the size of units included in that base plan.

The subject application was deemed complete prior to the adoption of the current Inclusionary Ordinance and is subject to a 15 percent inclusionary requirement. Based on the base density of 133 units, the project is required to make 20 units available to low and moderate income households (80% - 120% AMI) at an affordable ownership cost. As an example, the income limits established by The U.S. Department of Housing and Urban Development (HUD) for FY 2020 in Santa Cruz County indicate a Low Income Limit of $106,200 for a family of four.

The proposal includes a request for a Density Bonus pursuant to Part 3 of Chapter 24.16 of the Zoning Ordinance. The Density Bonus section of the zoning ordinance is consistent with state law requirements that allow for an increase in the number of market rate units in a residential development commensurate the proposed percentage of affordable units. The applicant is proposing to make available 15 of the 20 required inclusionary units to households at the very low income level (50 percent AMI) and to continue to make available the remaining five inclusionary units to households at the low income level (80% AMI). This level of affordability allows for the project to be eligible for a 35 percent density bonus, or 47 additional units. However, the applicant is requesting 42 additional units which equates to a 31.58 percent density bonus.

Density Bonus state law indicates that this level of affordability also makes the project eligible for two incentives/concessions, unlimited density bonus waivers, and modified parking requirements.

Incentives/Concessions. At the Elm Street passageway, the elevator shafts on either side of the passageway encroach 10 feet into the required 10 foot stepback above 35 feet, as required in the Downtown Plan for the Front Street/Riverfront Corridor. The total area of the 10 foot stepback above 35 feet along each side of the Elm Street passageway is approximately 860 square feet. Each elevator shaft is ten feet wide and represents about 8.5 percent of the each stepback area. Section 24.16.255(2) allows for an applicant to seek approval of specified incentives/concessions without any requirement that the applicant demonstrate to the city that the requested incentive or concession results in identifiable and actual cost reductions to the project to provide for affordable ownership costs. One of the incentives/concessions listed in this code section is a 20 percent reduction in setback area and the applicant has requested two such reductions for the encroachment of the elevator shafts on each side of the Elm Street pedestrian passageways. The project is eligible for such incentives/concessions pursuant to the City's Density Bonus Ordinance and state law requirements, and no additional documentation is required.

Density Bonus Waivers. Section 24.16.255(4) allows for applicants to seek approval of a density bonus waiver or modification of development standards that will have the effect of physically precluding the construction of a housing development eligible for a density bonus. The applicant is requesting the following waivers to development standards:

- Waiver of stepback requirements to reduce required 10-foot stepbacks above 50 feet on Front Street for 50 percent of the building frontage from 180 feet (50%) to 74 feet (20.5%) based on the combined building frontage.
- Waiver of stepback requirements to reduce required 10-foot stepback above 50 feet on the Riverfront frontage to between 0 and 10 feet.
- Waiver of building height standards in Additional Height Zone B to increase maximum building height from 70 feet and 5 stories above ground floor commercial to approximately 77'9" feet and 6 stories above ground floor commercial

The applicant has demonstrated that compliance with the required stepback above 50 feet and the maximum height for Additional Height Zone B would physically preclude development of the project at the requested density of 175 units. The applicant has developed the project to and beyond maximum allowed design standards and has, in the process, designed a project with smaller units overall than in the base project and with fewer units than would be allowable with a 35-percent bonus, which supports the inference that the project would be physically precluded without the requested waivers. In addition, the applicant has demonstrated, through detailed drawings (Attachment F), that a reasonable alternative floor plan complying with both the stepback and height requirements reduces the total unit count, as follows:

- In Building No. 1, the project would lose a net of one studio apartment and three one-bedroom units;
- In Building No. 2, a one-bedroom unit would need to be converted to a studio apartment, with an additional loss of five one-bedroom units and one two-bedroom unit; and
- In Building No. 3, the project would lose a net of three studio apartments and four one-bedroom units.

This evidence is sufficient to meet the applicant's burden to show that without the requested waivers, the applicant would be physically precluded from developing a 175 unit project.

Parking
The proposed mixed-use development is located within the Downtown Parking District and is subject to the parking ratios provided in Resolution NS-29,538 which allow for a commercial parking ratio of 1 space per 400 square feet. Also, as described above, the project is eligible for a density bonus and, as a result, a modified parking standard for residential units equal to 0.5 spaces per bedroom. As demonstrated in the table below, the project results in a requirement for 148 on-site parking spaces (104 residential parking spaces and 44 commercial parking spaces); and the plans propose to provide 142 residential and 45 commercial parking spaces on the site within a two-story, basement and ground-level garage. There is no deficiency in the parking provided. All of the residential parking spaces provided are proposed to be reserved for use of the residential tenants only. Conditions of approval require that the garages provide all required Electric Vehicle Supply Equipment installed spaces (minimum 23 spaces).

Parking Requirements Per City Zoning Ordinance (Resolution NS-29,538 and Modified Standards Per Density Bonus Ordinance)			
# of Bedrooms	**# of Units**	**Parking Ratio**	**Vehicular Parking Required**
Studio	53	0.5/bedroom	26.5
1	89	0.5/bedroom	44.5
2	33	0.5/bedroom	33
Commercial	11,498 sq.ft.	1/400 sq.ft.	29
Commercial (inc. public/private amenity space)	6,059 sq. ft.	1/400 sq.ft.	15
		Total # of spaces required:	148 104 residential 44 commercial
		Total provided:	142 residential 45 commercial
		Deficient:	0

Traffic/Circulation
The Downtown Plan was amended in 2017 to allow for an expansion of the Additional Height Zones, which was intended to allow for increased density in the downtown area. A Trip Generation Analysis was prepared for the Downtown Plan EIR, which estimated the construction of 321 apartments on the block east of Front Street, which is the location of the subject project site. The estimates at that time indicated that future development on the block would likely result in 1,864 net daily trips. This estimate was calculated based on probable use with a 40-percent reduction to account for internal capture, pass-by trips, walkability, bikability, and the Metro Transit Center *(Downtown Plan Amendment, July 2017)*.

A Trip Generation Analysis (Kimley-Horn, dated July 2019) was prepared for the proposed project using The Institute of Transportation Engineers (ITE) *Trip Generation Manual, 10th*

Edition (2017). The project is estimated to generate a net of 854 daily trips, which includes trip credits for existing uses and a 40% reduction described above. This estimate is consistent with the Downtown Plan EIR in that it is less than the estimated increase of 1,864 net daily trips and represents only a portion of the entire block.

Public improvements are required as a part of the project to achieve the goals of the Downtown Plan, to meet the requirements in the Municipal Code, and to mitigate the impacts of the project per the Downtown Plan Amendments EIR. The project shall provide sidewalks, street trees, and light standards along the parcel frontage. The project will also require access improvements to and from the site and improvements to the public right of ways including but not limited to a 'right turn in/right turn out only' restriction at the garage entrance, a double gate system with a roll down gate located at the entrance and arms located at least 75 feet into the garage, card readers, and rapid gate system. The applicant will be required to participate, on a fair share basis, in intersection improvement projects at Front/Soquel, Front/Laurel and Pacific/Laurel and the applicant will be required to pay the full cost of signal revision at the Front/Metro/ project driveway intersection and will be required to complete such improvements as a part of the project. Additionally, the applicant will be required to participate on a fair share basis in the construction of a two way left-turn lane on Front Street.

Additional public improvement requirements include the improvement of the Riverwalk from Soquel Ave. through the project site and would include a new substantial asphalt concrete pathway section, widening of the Riverwalk pathway to 12 feet, a concrete parking pad for the service truck that will maintain the on-site private storm water system, and improved green bike lane striping across the two driveways.

The project will also be required to provide a Transportation Demand Management Program (TDM) to achieve reduced vehicle miles travelled consistent with Climate Action Plan and General Plan goals and objectives, including but not limited to:

- Provide at least one parking space for, and subsidizing if necessary, a car share program (i.e. zip car) in the publically accessible portion of the parking facility. If unable to secure a partnership with a car share program, this space shall be marked for carpool vehicles.
- Provide information to all residents to enroll in the Cruz511 commute management platform and provide city-provided alternative commute information to all residents. Require all non-residential uses to enroll in Cruz511/GO Santa Cruz TDM program. And provide GO Santa Cruz brochures to all new employees.
- Enter in to a contract agreement with METRO to provide reimbursable transit passes to all residents. For this option, the applicant is required to work with the Santa Cruz METRO to develop a reimbursable pass program. Desired program parameters include distribution of transit passes to all residents of the project, where project will reimburse METRO on a monthly/quarterly basis for all rides used. Final agreement will be between project sponsor and METRO and the city would receive annual reports of total ridership.

In additional to the above improvements, programs, and fees, the applicant will be required to pay Traffic Impact Fees (TIF) unless phased or deferred payment terms are approved by the Planning and Public Works' Directors. The Traffic Impact Fee is calculated by the Public Works Department prior to building permit issuance and is currently estimated at $254,000.

Bike Circulation
As described throughout the report, the project includes two pedestrian passageways that connect Front Street to the Riverwalk. One pedestrian passageway is located at the terminus of Cathcart Street and is 60 feet wide and the other is located at the approximate location of the terminus of the future extension of Elm Street and is 30 feet wide. Both passageways are designed with a stairway, however, bike access is provided with a bike rail and alternative public access to the Riverwalk is provided in an adjacent elevator at the interior of the building. If both the bike rail and elevator do not provide feasible access, the Riverwalk is also accessible at the Laurel Street bridge and the Soquel Avenue bridge, which are located at either end of the block. The bike rail is consistent with policy SRFA-2 in the San Lorenzo Urban River Plan (SLURP) which requires new development projects to incorporate pedestrian and/or bike connections between Front Street and the Riverwalk at appropriate locations such as the extensions of Maple Street and Elm Street.

Coastal Permit
The primary purpose of the Coastal Permit is to ensure that projects are consistent with the Local Coastal Plan policies as they relate to public access and maintaining natural resources and public views of the sea. The project site is located within the Downtown Plan area between Front Street and the San Lorenzo River. The south portion of the project site is located within the Coastal Zone and within the mapped appealable area. The building is proposed to be 77'9" tall and will be visible from the San Lorenzo River but will not likely be visible from the beach or the trestle at the river mouth. The public view from the San Lorenzo River levee is identified as a significant urban viewshed in the General Plan and the project will not impact the views of the river or the coast from the Riverwalk. The levee blocks the view of the river from the downtown area, therefore, the building will not impact existing views of the review from downtown. The development is anticipated in the Downtown Plan as infill development in an urban area and will meet the goals and policies in the Downtown Plan that encourage the development of upper floor residences to take advantage of river viewsheds and ground floor commercial uses that provide connectively between the downtown core, Front Street, and the river. The project will enhance visibility of and access to the river by creating attractive and active pedestrian paseos that lead to the levee level, and it will significantly expand the land area at the top of the levee and provide active uses along the levee, thereby improving the attractiveness of the area, increasing the number of eyes on the levee, enhancing safety on the levee, and encouraging more use of the levee trail along the river.

The project site is currently developed and is located within a developed urban area. An Archaeological Report was submitted which indicates that there is a low potential for archaeological resources on the property; however, standard conditions of approval are included that require reporting to occur if resources are discovered during construction. The project site, including proposed areas of disturbance along the outer edge of the levee, does not contain

sensitive or protected habitat; however, conditions of approval are included to ensure compliance with General Plan Action NRC2.2.1 and associated Table 1, that require the applicant to undertake bird nesting surveys if construction, including tree removal, adjacent to the San Lorenzo River is scheduled to begin between February 1 and September 1 to determine if nesting birds are in the vicinity of the construction sites. The project would have no effect on wildlife movement.

The project is consistent with several policies listed in the General Plan/Local Coastal Program 1990-2005:

- **GOAL EQ 2: Protect water quality of ocean, watershed lands, surface waters and ground water recharge areas from sedimentation, pollution, and salt-water intrusion.**
  The project is required to comply with the California Water Board Post Construction Stormwater Management Requirements (PCR's) for the management of runoff and erosion control. The project will utilize a filter treatment unit and a bio-retention basin area to satisfy water quality and runoff treatment requirements.
- **GOAL EQ 5: Implement, to the greatest degree possible, transportation strategies that reduce the consumption of fossil fuels, and energy strategies that increase energy-efficiency and energy conservation in all sectors of energy usage and which increase the production and use of renewable energy sources within the City.**
  The project site is located within a transit priority area where it is in close proximity to alternative forms of transportation such as the metro center and publically available rental bikes. The project site is also within walking and biking distance to commercial goods and services, employment opportunities, and recreational areas such as the beach, the boardwalk, the arena, the wharf and West Cliff Drive. The construction of residential units in a transit priority area will reduce the consumption of fossil fuels and encourage energy conservation by providing opportunities for reduced reliance on the automobile.
- **GOAL L2: Provide for a variety and balance of residential, commercial, and industrial land uses while protecting environmental resources and responding to changing community needs, interests, and development constraints.**
  As described above, the project site is located within a transit priority area which will address a changing community interest to reduce car ownership. The project site is located adjacent to the San Lorenzo River and new residential units and commercial areas will face the river which will encourage increased maintenance of the river and adjacent habit which will benefit the environmental resource while providing much needed housing for a variety of income levels.
- **GOAL L3: Protect the quality of, and prevent significant new incursion of urban development into, areas designated as open space or agricultural lands and provide, when possible, permanent protection of these lands, recognizing their value in inhibiting urban sprawl and maintaining City identity, as a natural resource with significant biotic resources and/or their potential for providing scenic, recreational and educational enjoyment.**
  The project will be located adjacent to the Riverwalk and the San Lorenzo River open space area and will only disturb the outer side of the levee and not the riparian habitat inside the river channel. The project will increase the width of the Riverwalk in the

project location to create additional, publically accessible open space area to enhance the river as a natural resource for scenic, recreational, and educational enjoyment. The project site is located in the downtown area which is a developed urban area, therefore the project will not contribute to urban sprawl or the degradation or minimization of open space area or agricultural lands.

- **GOAL L4: Plan community facilities and services to serve the projected population, allowing development only when adequate facilities and services are provided and are available to serve it.**
  While there are no community facilities proposed, the project does include the establishment of additional, publically-accessible, open space area at the Riverwalk to serve the community and all services and utilities are available to serve the development.
- **GOAL L5: Develop compatible relationships between land-use and circulation patterns and encourage land use patterns that encourage an efficient transportation system and discourage urban sprawl and excessive dependence on the automobile.**
  The project site is located in the downtown area which provides many opportunities for alternative transportation including walking/biking, the use of electric rental bikes, the use of public transportation, and the Riverwalk. The project will be in close proximity to commercial goods and services, employment uses, and recreational areas and will encourage an efficient transportation system and will lessen dependence on the automobile.
- **GOAL CD2: Protect and enhance the City's natural setting and scenic resources.**
  The project will protect and enhance the City's natural setting and scenic resources in that the project site is located in the downtown area which is a developed, urban area, and the project will not impact sensitive habitat associated with the river in that ground disturbance will only occur on the outside of the levee and not inside the river channel. The project will enhance the river as a scenic resource by expanding the area of the Riverwalk and by providing commercial uses and residential uses facing the river to activate the river for scenic, recreational, and educational enjoyment. The river is not currently visible from the downtown area due to the height of levee and the project will enhance this connectivity by providing two pedestrian pathways between Front Street and the Riverwalk.
- **GOAL C1: Develop a comprehensive, multi-modal circulation planning program that takes as its highest priority reduction of automobile trips by the creation of viable alternative transportation modes, effective transportation systems management programs, and integration of land-use and circulation planning.**
  The project site is located in the downtown area which is a transit priority area and which provides many options for the use of alternative forms of transportation. Many commercial services, goods, employment uses, and recreational areas and amenities will be able to be accessed by foot or bike. Conditions of approval require the applicant to prepare a Transportation Demand Management Program to achieve reduced vehicle miles travelled consistent with Climate Action Plan and General Plan goals and objectives.
- **GOAL C2: Develop and promote pedestrian travel as a viable transportation mode by developing and maintaining a safe, comprehensive, convenient, accessible and aesthetically pleasing pedestrian system.**

As described above, the project will promote pedestrian travel as a viable transportation mode in that the project site is located across Front Street from the metro center and the downtown commercial core and the beach recreational areas are within walking and biking distance of the development. The Riverwalk is located along the scenic river and provides access between Highway 1 and the coast.

- **GOAL ED4: Promote revitalization of the Downtown Central Business District as the City's center for commerce, office, culture, entertainment restaurant activity, and mixed use residential.**
  The development will add 175 residential units to the downtown area which will support businesses in the downtown vicinity and the new building will provide new commercial spaces on the ground floor and facing the river to support an extension of the downtown core to Front Street and the Riverwalk.
- **GOAL PR2: Ensure that adequate types, numbers and distribution of recreational facilities are available to residents of Santa Cruz.**
  The project site is surrounded by recreational activities that are within walking and biking distance and the development itself provides additional expanded outdoor, publically-accessible open space area at the Riverwalk.

Flood Zone Development

The site is in FEMA Flood Zone A99, which is an area with a one-percent annual chance of flooding that will be protected by a federal flood control system where construction has reached specified legal requirements. The City of Santa Cruz has worked to improve the flood capacity of the San Lorenzo River levees over the past twenty years. In 2002, FEMA re-designated much of the downtown and beach area from A-11 to the A-99 Flood Zone designation in recognition of the significant flood improvements resulting from the San Lorenzo River Flood Control and Environmental Restoration Project. As reported in the General Plan EIR, the project increased the height of the river levees and rehabilitated the three downtown bridges (over the San Lorenzo River) to increase flood flow capacity. Under the A-99 designation, new buildings and improvements are not mandated to meet FEMA flood construction requirements.

Health in All Policies (HiAP)

HiAP is a collaborative approach to improving the health of all people by incorporating health considerations into decision-making across sectors and policy areas. HiAP is based on 3 pillars: *equity*, *public health*, and *sustainability*. The goal of HiAP is to ensure that all decision-makers are informed about the health, equity, and sustainability impacts of various policy options during the policy development process. The project location encourages a sustainable and healthy lifestyle given the project's bikable/walkable nature due to its close proximity to commercial uses downtown and recreational amenities in the beach area. The site is also across the street from the Metro Station thereby further promoting sustainable transportation use by residents. The project will provide a variety of housing types (studios, one bedroom, and two bedroom units) at a variety of rental or ownership costs, including units available to low income and very low income households. The project is consistent with the HIAP directive, for the reasons described above regarding efficient use of land, healthy mobility options, and social diversity.

ENVIRONMENTAL REVIEW

An environmental checklist was prepared for the proposed project in support of the EIR Notice of Preparation (NOP). The purpose of the checklist was to evaluate the impact categories covered in the City's certified Downtown Plan Amendments EIR and General Plan 2030 EIR to determine whether the project's impacts had been adequately analyzed in previous EIRs pursuant to CEQA or whether any new significant impacts peculiar to the project or project site would result. Where an impact resulting from the project was previously adequately analyzed, the review provides a cross-reference to the pages in the Downtown Plan Amendments EIR and/or General Plan EIR where information and analysis may be found relative to the environmental issue listed under each topic. The checklist also identifies whether the project involves new significant impacts or substantially more severe impacts than analyzed in the Downtown Plan Amendments EIR and/or General Plan EIR or new significant impacts not peculiar to the site or project. The checklist concluded that cultural resources (historical resources) and energy required additional analysis. As a result of the EIR scoping process, the City also chose to further analyze issues related to biological resources, geology/soils, and land use in the EIR. The EIR also evaluates topics required by CEQA and CEQA Guidelines for all EIRs, including growth inducement, project alternatives, and cumulative impacts.

Pursuant to State CEQA Guidelines section 15121, an EIR is an informational document to inform public agency decision-makers and the public generally of the significant environmental effects of a project, identify possible ways to minimize the significant effects, and describe reasonable alternatives to the project. The public agency shall consider the information in the EIR along with other information which may be presented to the agency. While the information in the EIR does not control the ultimate decision about the project, the agency must consider the information in the EIR and respond to each significant effect identified in the EIR by making findings pursuant to Public Resources Code section 21081.

Pursuant to CEQA (Public Resources Code section 21002), public agencies should not approve projects as proposed if there are feasible alternatives or feasible mitigation measures, which would substantially lessen the significant environmental effects of such projects. Pursuant to section 15021 of the State CEQA Guidelines, CEQA establishes a duty for public agencies to avoid or minimize environmental damage where feasible. According to the State CEQA Guidelines, "feasible" means capable of being accomplished in a successful manner within a reasonable period of time, taking into account economic, environmental, legal, social, and technological factors. This section further indicates that CEQA recognizes that in determining whether and how a project should be approved, a public agency has an obligation to balance a variety of public objectives, including economic, environmental, and social factors, and an agency shall prepare a "statement of overriding considerations" as to reflect the ultimate balancing of competing public objectives when the agency decides to approve a project that will cause one or more significant effects on the environment.

The EIR concluded that significant and potentially significant environmental impacts resulting from the project can either be substantially lessened or avoided with implementation mitigation measures included in the EIR, except for impacts to historical resources which cannot be mitigated to a less-than-significant level and remains significant and unavoidable.

CEQA Guidelines require that an EIR describe and evaluate alternatives to the project that could eliminate significant adverse project impacts or reduce them to a less-than-significant level, and the EIR evaluated two alternatives in addition to the required No Project Alternative. The three alternatives considered in the EIR are: 1) Partial Preservation – Incorporate facades into project design; 2) Relocation of Historic Buildings; and 3) The No Project Alternative – Required by CEQA.

1) Partial Preservation

This alternative involves the partial preservation of the existing historic buildings on the site through retention of the primary historic building facades and incorporating them into the new building. This alternative would involve the preservation of the primary street facades and the demolition of all secondary facades, structure, foundations, and roofs. The street facades would be disassembled in eight- to ten-foot-wide segments, stored at a different location, and re-assembled and incorporated into the Project after completion of subsurface work. As indicated above, it is not possible to retain the facades in place during construction. Under this alternative, there would be no change to the proposed Project uses and site layout, except the design would be altered to incorporate the building facades of the existing on-site historic buildings. Alternative 1 would retain a number of character-defining features of the historic resources, however, it would not retain the buildings' character-defining massing or height as volumetric structures. Thus, the buildings' significant architectural styles would be conveyed in the features of their facades, but their representation as whole buildings would be compromised. Furthermore, the massing, size, and scale of the new seven-story buildings to be constructed behind the historic primary façades would not be compatible with the one-story historic resources, and the Project would not be in compliance with the Secretary of the Interior's Standards for Rehabilitation. In addition, it would not be feasible to reconstruct the facades in the exact locations of the existing buildings without requiring a new opening to be provided in order to accommodate the mid-block passageway. Review by the Project structural engineer indicates that this process can be accomplished; however, the overall cost of the process is unknown, so it is difficult to fully assess the impact of that cost on the viability of the Project. However, since March 2020, the COVID 19 pandemic has resulted in a very substantial disruption of the economy and financial markets, and this economic disruption and ongoing uncertainty regarding the criteria for and availability of construction financing seem likely to persist for some time into the future. As a result, the costs for implementing Alternative 1 likely will have a greater negative impact on project feasibility than would have been likely under pre-COVID-19 conditions. For these reasons, Alternative 1 would at best only slightly lessen the significant impact of the Project. Under this alternative, the identified significant unavoidable impact related to historical resources would be slightly lessened but would not be reduced to a less-than-significant level and the project may not be financially viable under this alternative.

2) Relocation of Historic Buildings

Alternative 2 involves the relocation of the two historic buildings to a new site. Under this alternative, there would be no change to the proposed Project uses and site layout. Due to the nature of the historic buildings' perimeter concrete and CMU walls on non-structural slabs on grade, this alternative would involve deconstruction followed by reconstruction. More specifically, it would involve vertical shoring and bracing of the structures' roofs and walls;

removal of existing roofing material; salvaging the roof beams, trusses, and interior columns and supports; and disassembly of all perimeter walls into eight- to ten-foot sections. These materials would be delivered to a new site. Floor slabs, non-structural partition walls, and existing foundations would be demolished and recycled. New foundations and floor slabs would be built at the new site, and all salvaged elements would be reassembled. The buildings would be reconstructed as close to their original forms as possible, while upgrading the buildings to meet current building codes. The new location would need to be similar to the existing historic setting which is downtown Santa Cruz. There are no known vacant properties in the downtown area that are not part of a planned future development. Other properties in the vicinity of the Project site that are also located adjacent to the San Lorenzo River are currently developed and/or could be redeveloped in the future under the City's adopted *Downtown Plan*. Therefore, it appears that there are no downtown sites that could accommodate relocation of the two structures. In addition, there are no other nearby sites owned by or potentially available to the applicant that could be used. Another key factor in determining the feasibility of relocation as a viable alternative is determining if the buildings can be physically moved, the process of which is described above. While this option is theoretically possible, review by the project structural engineer concluded that it may not be economically or logistically feasible due to the nature of the existing structures (size, material used, and type of construction). Preliminary estimates to disassemble, move, re-assemble, and bring to near current standard will be an eight-figure cost, excluding the cost of land acquisition. In addition, since March 2020, the COVID 19 pandemic has resulted in a very substantial disruption of the economy and financial markets, and this economic disruption and ongoing uncertainty regarding the criteria for and availability of construction financing seem likely to persist for some time into the future. As a result, the significantly higher costs to implement Alternative 2, even assuming an acceptable alternative site were available, are likely to have an even greater impact on project feasibility than would have been likely under pre-COVID-19 conditions. Under this alternative, the identified significant unavoidable impact related to historical resources would be substantially lessened and potentially reduced to a less-than-significant impact if the relocated structure could comply with the Secretary of Interior Standards for Reconstruction, and if not, the impact would not be reduced to a less-than-significant level. Additionally, the project may not be financially viable under this alternative.

3) No Project Alternative

Section 15126.6(e) of the State CEQA Guidelines requires that the impacts of a "no project" alternative be evaluated in comparison to the proposed project. Section 15126(e) also requires that the No Project Alternative discuss the existing conditions that were in effect at the time the Notice of Preparation was published, as well as what would be reasonably expected to occur in the foreseeable future if the project were not approved, based on current plans and consistent with available infrastructure and community services. For the purpose of the Alternatives discussion, the No Project Alternative assumes that in the foreseeable future, another project to redevelop the site could be proposed. However, it is noted that no redevelopment of the project site would be inconsistent with the General Plan and Downtown Plan forecasts and intentions for redevelopment of the site and project area. Given adopted City plans for the area, another development project may be proposed for the project site in

the future, although the type and amount of development that may be proposed is unknown at this time.

The No Project Alternative would not result in construction of the proposed project and none of the impacts identified in the EIR would occur. No new significant impacts would occur under this alternative. Since redevelopment of the downtown area, including the project properties, is encouraged in the City's adopted Downtown Plan to provide additional residential uses, it is likely that some form of a mixed-used commercial-residential project would be proposed at some point in the future, although the type and timing of such a project are not known. However, some of the impacts identified in this EIR could result at some unknown time in the future and at an unknown magnitude depending on the development proposal. It is also noted that there are some public improvements and amenities proposed as part of the project that would not occur under the No Project Alternative, e.g., improved access to the Santa Cruz Riverwalk and an expanded outdoor river area. Thus, the No Project Alternative would not accomplish goals set forth in the Downtown Plan regarding improvements along the Riverwalk, including improved access.

In accordance with CEQA, it is recommended that despite the occurrence of significant unavoidable environmental effects associated with the project as mitigated, there exist certain overriding economic, social and other considerations for approving the project that outweigh the occurrence of the significant unavoidable impact to historical resources. These recommended findings are contained in the attached statement of overriding considerations.

Applicable policies and mitigation measures from the General Plan 2030, General Plan 2030 EIR, Downtown Plan, and Downtown Plan Amendments EIR have been incorporated into the project or are included as conditions of approval.

The full Draft and Final Environmental Impact Report volumes, which together constitute the project EIR, are available for viewing on the City's website at: www.cityofsantacruz.com/ceqa

SUMMARY AND RECOMMENDATION

The project will allow for the construction of a seven-story building with ground-floor commercial uses and 175 upper-level, residential units. The project will result in infill development within the downtown area and in close proximity to the metro station, commercial services, personal services, other employment uses, and recreational areas and amenities. The Downtown Plan specifically envisions the proposed development in the subject location and the development is consistent with the goals and policies provided in the Downtown Plan and the General Plan for the redevelopment of Front Street, for the connection between the Pacific Avenue commercial core and the Riverwalk, and for the revitalization of the river as a natural amenity. The design of the building is consistent with the design requirements in the Downtown Plan to separate building masses and to provide distinct designs that convey a grouping of buildings. The development has been redesigned to meet the recommendations of the Historic Preservation Commission by incorporating some of the details of the historic building facades into the front façade of the building. Staff recommends that the Planning Commission

recommend that the City Council certify the Environmental Impact Report and recommend approval of the Nonresidential Demolition Authorization Permit, Design Permit, Tentative Map, Special Use Permit, Administrative Use Permit, Coastal Permit, Revocable License for an Outdoor Extension Areas, Heritage Tree Removal Permit, and Street Tree Removal for the proposed project based on the Findings below and the Conditions of Approval in Exhibit A.

Submitted by:	Approved by:
Samantha Haschert Principal Planner	Eric Marlatt Assistant Director

Attachments:

A. Draft City Council EIR Certification Resolution
B. Draft City Council EIR Findings, MMRP, Statement of Overriding Considerations
C. Draft City Council Zoning Permits and Conditions of Approval Resolution
D. Project Plans, prepared by Humphreys and Partners Architects L.P, Architecture and Planning; Jon Worden, Architect; The Guzzardo Partnership Inc., Landscape Architect; and BKF Engineers, Civil Plans.
E. Historic Preservation Commission Staff Report, dated 8/5/2020
F. Stepback diagrams supporting Density Bonus waivers
G. Public Comments (Additional public comments attached to the Historic Preservation Commission staff report)

RESOLUTION NO. NS-xx,xxx

RESOLUTION OF THE CITY COUNCIL
OF THE CITY OF SANTA CRUZ CERTIFYING THE FINAL
ENVIRONMENTAL IMPACT REPORT FOR THE
RIVERFRONT PROJECT

WHEREAS, a Notice of Preparation ("NOP") of an Environmental Impact Report ("EIR") for the Riverfront Project (the "Project") was issued by the Planning and Community Development Department of the City of Santa Cruz on November 20, 2019; and

WHEREAS, an EIR Scoping Meeting was held on December 4, 2019 to receive comments regarding the scope of issues to be addressed in the EIR; and

WHEREAS, a Draft Environmental Impact Report ("DEIR" or "Draft EIR") was prepared and issued for agency and public review and comment on May 11, 2020, for a 45-day review period that ended on June 24, 2020; and

WHEREAS, seventeen (17) comment letters were received on the Draft EIR from private individuals as well as private and public entities; and

WHEREAS, a Final Environmental Impact Report ("FEIR" or "Final EIR"), incorporating all comments received on the DEIR and responses to comments was issued on July 27, 2020; and

WHEREAS, the complete Final EIR consists of the May 2020 Draft EIR, comments received on the document, and responses to comments contained in the July 2020 FEIR, modifications made to the text of the Draft EIR that are also included in the FEIR, appendices to the Draft and Final EIRs, and all documents and resources referenced and incorporated by reference in the EIR; and

WHEREAS, the FEIR has been completed in compliance with the California Environmental Quality Act (CEQA), Public Resources Code Section 21000 et seq, the Guidelines for Implementation of the California Environmental Quality Act (14 Cal. Code Regs.

Section 15000 et seq.) (the "State CEQA Guidelines") and local procedures adopted pursuant thereto; and

WHEREAS, the Historic Preservation Commission held a public hearing on the Project and the FEIR on August 5, 2020 and issued recommendations to the City Council; and

WHEREAS, the Planning Commission held a public hearing on the Project and the FEIR on September 3, 2020 and issued recommendations to the City Council; and

WHEREAS, the City Council considered the FEIR at a public meeting on ___ , 2020;

NOW, THEREFORE, BE IT RESOLVED by the City Council of the City of Santa Cruz as follows:

- The City Council certifies that the Final EIR has been completed in compliance with CEQA, the State CEQA Guidelines and local procedures adopted pursuant thereto.
- The City Council hereby finds that the Final EIR reflects the independent judgment and analysis of the City Council, as required by Public Resources Code Section 21082.1.
- The City Council has independently reviewed and analyzed the Final EIR and considered the information contained therein and all comments, written and oral, received prior to adopting this resolution.
- The City Council therefore hereby certifies the Final Environmental Impact Report for the Project.

PASSED AND ADOPTED this_____day of_____, 2020 by the following vote:

AYES:

NOES:

ABSENT:

DISQUALIFIED:

APPROVED: _____
Mayor

ATTEST: _____
City Clerk Administrator

RESOLUTION NO. NS-xx,xxx

RESOLUTION OF THE CITY COUNCIL OF THE CITY OF SANTA CRUZ ADOPTING FINDINGS OF FACT, A MITIGATION MONITORING AND REPORTING PROGRAM AND A STATEMENT OF OVERRIDING CONSIDERATIONS FOR THE RIVERFRONT PROJECT

WHEREAS, a Notice of Preparation ("NOP") of an Environmental Impact Report ("EIR") for the Riverfront Project (the "Project") was issued by the Planning and Community Development Department of the City of Santa Cruz on November 20, 2019; and

WHEREAS, an EIR Scoping Meeting was held on December 4, 2019 to receive comments regarding the scope of issues to be addressed in the EIR; and

WHEREAS, a Draft Environmental Impact Report ("DEIR" or "Draft EIR") was prepared and issued for agency and public review and comment on May 11, 2020, for a 45-day review period that ended on June 24, 2020; and

WHEREAS, seventeen (17) comment letters were received on the Draft EIR from private individuals as well as private and public entities; and

WHEREAS, a Final Environmental Impact Report ("FEIR" or "Final EIR"), incorporating all comments received on the DEIR and responses to comments was issued on July 27, 2020; and

WHEREAS, the FEIR has been completed in compliance with the California Environmental Quality Act (CEQA), Public Resources Code Section 21000 et seq, the Guidelines for Implementation of the California Resources Environmental Quality Act (14 Cal. Code Regs. Section 15000 et seq.) (the "State CEQA Guidelines") and local procedures adopted pursuant thereto; and

WHEREAS, the Historic Preservation Commission held a public hearing on the Project and the FEIR on August 5, 2020 and issued recommendations to the City Council; and

WHEREAS, the Planning Commission held a public hearing on the Project and the FEIR on September 3, 2020 and issued recommendations to the City Council; and

WHEREAS, on _____, 2020, the City Council in Resolution No. _____ certified the FEIR for the Project; and

WHEREAS, the complete Final EIR consists of the May 2020 Draft EIR, comments received on the document, and responses to comments contained in the July 2020 FEIR, modifications made to the text of the Draft EIR that are also included in the FEIR, appendices to the Draft and Final EIRs, and all documents and resources referenced and incorporated by reference in the EIR; and

WHEREAS, the Final EIR identified certain significant and potentially significant adverse effects on the environment, including cumulative impacts to which the Project would make a cumulatively considerable contribution; and

WHEREAS, the Final EIR outlined various mitigation measures that would substantially lessen or avoid the Project's significant effects on the environment, as well as a reasonable range of feasible alternatives, which would provide some environmental advantages over the Project; and

WHEREAS, the City of Santa Cruz is required, pursuant to CEQA, to adopt all feasible mitigation measures or feasible Project alternatives that can substantially lessen or avoid any significant environmental effects of a proposed Project; and

WHEREAS, Public Resources Code Section 21081, subdivision (a), requires a public agency, before approving a Project for which an EIR has been prepared and certified, to adopt findings specifying whether mitigation measures and, in some instances, alternatives discussed in the EIR, have been adopted or rejected as infeasible; and

WHEREAS, Sections I through X of Exhibit A to this Resolution is a set of Findings of Fact prepared in order to satisfy the requirements of Public Resources Code section 21081, subdivision (a); and

WHEREAS, as the Findings of Fact explain, the City Council, reflecting the advice of City and Agency Staff, the Planning Commission, and extensive input from the community, has expressed its intention to approve the proposed Project in spite of its significant environmental impacts; and

WHEREAS, in taking this course, the City Council has acted consistently with the CEQA mandate to look to feasible Project mitigations and/or alternatives as a means of substantially lessening or avoiding the environmental effects of the Project as proposed; and

WHEREAS, some of the significant and potentially significant environmental effects associated with the Project, as approved, can either be substantially lessened or avoided through the inclusion of mitigation measures proposed in the Final EIR; and

WHEREAS, the City Council in approving the Project as proposed intends to adopt all mitigation measures set forth in the Findings of Fact; and

WHEREAS, those significant effects that cannot be avoided or substantially lessened by the adoption of feasible mitigation measures will necessarily remain significant and unavoidable; and

WHEREAS, the City Council has determined, based on the reasons and substantial evidence set forth in the Findings of Fact, that none of the alternatives addressed in the Final EIR are feasible and environmentally superior to the Project, except that Alternative 1, is the designated environmentally superior alternative as determined under CEQA, but it is not feasible based on the Findings set forth below; and

WHEREAS, Public Resources Code Section 21081, subdivision (b), and CEQA Guidelines section 15093 require the Agency to adopt a "Statement of Overriding Considerations" before approving a project with significant unavoidable environmental effects; and

WHEREAS, the City Council desires, in accordance with CEQA, to declare that, despite the occurrence of significant unavoidable environmental effects associated with the Project as mitigated and adopted, there exist certain overriding economic, social and other considerations for approving the Project that the City Council, in its legislative capacity, believes justify the occurrence or potential occurrence of those impacts and render them acceptable; and

WHEREAS, Section IX of Exhibit A attached hereto is a Statement of Overriding Considerations specifying the economic, social and other benefits that render acceptable the significant unavoidable environmental effects associated with the mitigated Project; and

WHEREAS, the City Council recognizes the City's obligation, pursuant to Public Resources Code Section 21081.6, subdivision (a), to ensure the monitoring of all adopted mitigation measures necessary to substantially lessen or avoid the significant effects of the Project; and

WHEREAS, Exhibit B to this Resolution is the Mitigation Monitoring and Reporting Plan prepared in order to comply with § 21081.6, subdivision (a);

NOW, THEREFORE, BE IT RESOLVED by the City Council of the City of Santa Cruz as follows:

In approving this Resolution, the City Council adopts Sections I through VII of Exhibit A attached hereto in order to satisfy its obligations under Public Resources Code sections 21002 and 21081, subdivision (a);

In approving this Resolution, the City of Santa Cruz adopts Section IX of Exhibit A attached hereto in order to satisfy its obligations under Public Resources Code Sections 21081, subdivision (b), and CEQA Guidelines section 15093;

In approving this Resolution, City Council adopts Exhibit B attached hereto in order to satisfy its obligations under Public Resources Code Section 21081.6, subdivision (a); and

The City Council hereby approves the Project and directs City Staff to file with the County Clerk and the Office of Planning and Research in Sacramento a Notice of Determination commencing the 30-day statute of limitations for any legal challenge to the Project based on alleged non-compliance with CEQA.

PASSED AND ADOPTED this____day of_____2020 by the following vote:

AYES:

NOES:

ABSENT:

DISQUALIFIED:

APPROVED: _____
Mayor

ATTEST: _____
City Clerk Administrator

EXHIBIT A

CEQA FINDINGS OF FACT

and

STATEMENT OF OVERRIDING CONSIDERATIONS

OF THE CITY COUNCIL OF THE CITY OF SANTA CRUZ

for the

RIVERFRONT PROJECT

August __, 2020

I.
INTRODUCTION

The City of Santa Cruz ("City"), as lead agency, prepared an Environmental Impact Report ("EIR") for the Riverfront Project ("the Project"). In its entirety, the EIR consists of the May 2020 Draft EIR ("Draft EIR" or "DEIR") and the July 2020 Final EIR ("Final EIR" or "FEIR"). The EIR is a project-level EIR pursuant to Section 15161 of the State "CEQA Guidelines" (Cal. Code Regs., tit. 14, § 15000 et seq.). The project consists of demolition of existing commercial buildings and construction of a mixed-use building with 175 residential condominium units and 11,498 square feet of commercial space. (DEIR, p. 1-2.)

These findings, as well as the accompanying statement of overriding considerations in Section IX, *infra*, have been prepared in accordance with the California Environmental Quality Act ("CEQA") (Pub. Resources Code, § 21000 et seq.) and its implementing guidelines, the CEQA Guidelines (Cal. Code Regs., tit. 14, § 15000 et seq.), and the City of Santa Cruz CEQA Guidelines. The FEIR is hereby incorporated by reference to this resolution and this attachment.

II.
PROJECT DESCRIPTION

A. Location

The City of Santa Cruz is located along the northern shore of Monterey Bay, approximately 75 miles south of San Francisco, 25 miles south of San Jose and 40 miles north of Monterey (see Figure 1-1 in DEIR). The Project site is located in the developed downtown area of the City. The approximately 0.98-acre (42,684-square-foot) Project site encompasses five parcels along Front Street and adjacent to the San Lorenzo River levee, at 418, 428, 440, 504, and 508 Front Street (APNs 005-151-39, -22, -30, -31, -50). The Project site also includes approximately 15,500 square feet of City owned property on the landward side of the San Lorenzo River levee. The Project site is partially located within the coastal zone and is located approximately 0.6 miles north of the Monterey Bay. The Project site is shown on Figure 1-2 in the DEIR. The portion of the Project site located in the coastal zone is shown on Figure 2-1 in the DEIR.

The Project site is bounded by a parking lot/business just north of Cathcart Street on the north, the Santa Cruz Riverwalk/San Lorenzo River on the east, a commercial building operating as the Santa Cruz Fellowship Hall on the south, and Front Street on the west. The site currently contains three one-story commercial buildings and at-grade, paved parking lots with associated areas of landscaping. Existing uses on the Project site include a mix of restaurant and service commercial uses and parking lots, including the non-profit movement arts center, The 418 Project. The existing building square footage totals approximately 20,820 square feet, and the existing parking lot totals approximately 21,750 square feet. (DEIR, p. 3-1.)

B. Overview

The Riverfront Project consists of demolition of existing commercial buildings and the construction of a seven-story, mixed-use building with 175 residential condominium units and 11,498 square feet of ground floor and levee-front commercial space. A total of 20 residential units would be designated as affordable housing, with 15 units for very-low-income households and 5 units for low-income households. The Project applicant is seeking a 35-percent density bonus pursuant to state and local law (Government Code Section 65915 and City of Santa Cruz Municipal Code Chapter 24.16, Part 3). Access, parking and levee improvements are proposed. (DEIR, p. 3-4.)

C. Project Objectives

The objectives of the proposed Project provided by the City are as follows; those provided by the Applicant are identified as such:

1. Develop a mixed-used commercial-residential project that supports the following First Principles of the Downtown Plan:
    a) *Form and Character.* Construct new buildings with individual character and architectural articulation.
    b) *Building Height.* Develop a project with buildings that meet the criteria for additional height as the 2017 Downtown Plan update recognizes that taller buildings contribute greatly to the architectural fabric of the City and can provide significant opportunities to plan for environmentally sound infill development without damaging the character of the City.
    c) *Housing.* Provide a significant new housing opportunity along the San Lorenzo riverfront, north of Laurel and adjacent to regional transit center.
    d) *Accessibility.* Develop a project that aesthetically integrates access to the site, the San Lorenzo River, and downtown.
    e) *Open Space and Streetscape.* Develop a project that creates public plazas in the form of two pedestrian passageways and open space areas along the riverfront to contribute to a socially active and pedestrian-oriented downtown.
    f) *Circulation.* Construct a housing project in the downtown area that includes project improvements such as increased sidewalk width and pedestrian passageways between the downtown and the Riverwalk in support of a primarily pedestrian-oriented downtown, and that places residents in close proximity to employment opportunities, goods, and services to encourage pedestrian, bicycle, and transit movement.

2. Support the goals of the City of Santa Cruz 2015-2023 Housing Element by:
    a) Developing a project that provides diversity in housing types and affordability levels to accommodate present and future housing needs of Santa Cruz residents.
    b) Developing a project that provides a greater level of affordability than that which is required by the City's Inclusionary Ordinance by utilizing the state Density

Bonus Law to feasibly maximize the number of affordable units that can be approved. (*Applicant Objective*)

c) Construct a project that will contribute to the City's housing needs while promoting an environmentally sustainable, compact community within the Downtown area. (*Applicant Objective*)

3. Provide a mixed-use, transit-priority, pedestrian-oriented project that supports the regional Sustainable Communities Strategies and other City and statewide goals and actions to reduce greenhouse gas emissions and respond to global warming and climate change.

4. In support of San Lorenzo Urban River Plan and Local Coastal Program policies, provide a new development that incorporates design features that encourage active engagement with the Riverwalk, including filling the area adjacent to the Riverwalk with landscaping, providing direct physical access to the Riverwalk, including appropriate active commercial and/or residential uses adjacent to the Riverwalk.

5. Construct a project that incorporates pedestrian and/or bicycle connections between Front Street, the Riverwalk, Cathcart Street, and the future extension of Elm Street. (*Applicant Objective*)

6. Provide new and improved public access to the San Lorenzo River through provision of attractive connections to the San Lorenzo River with the development of key east-west public passageways between Front Street and the Riverwalk and a second pedestrian passageway south of the Cathcart Street passageway, consistent with Section 30211 of the Coastal Act, the Downtown Plan, and the San Lorenzo Urban River Plan.

7. Construct a mixed use project that includes wide breaks between buildings to reduce building mass and to retain views to the river levee from Pacific Avenue.

8. Develop a project adjacent to the Riverwalk that is designed to prevent impacts to the adjacent sensitive San Lorenzo River and that will result in clean-up of degraded areas along the back of the levee and so promote public health and safety.

9. Provide greatly enhanced public access to the San Lorenzo River through provision of a new landscaped terrace that provides an amenity and contributes to the open space character and safety along the Riverwalk.

10. Maintain a financially viable project design through the administrative review and approval process to help assure that the project will be constructed. (*Applicant Objective*). (DEIR, pp. 3-2 to 3-4.)

Based on its own review of the EIR and other information and testimony received in connection with the project, the City Council finds these objectives to be acceptable. In choosing to approve the project, the City thus accords these objectives significant weight in considering the feasibility of alternatives analyzed in the EIR, and in invoking overriding considerations in approving the

project. (See *California Native Plant Society v. City of Santa Cruz* (2009) 177 Cal.App.4th 957, 1001–1002 (*CNPS*); *Sierra Club v. County of Napa* (2004) 121 Cal.App.4th 1490, 1507–1508; *Sequoyah Hills Homeowners Assn. v. City of Oakland* (1993) 23 Cal.App.4th 704, 715 (*Sequoyah Hills*).)

D. Project Description

The proposed Project consists of construction of a seven-story, mixed-use project with residential and commercial uses. The new mixed-use building would be approximately 188,692 gross square feet (GSF). The Project would consist of three buildings, including a parking garage with two levels of parking (one partially below ground and one at grade with Front Street), eight ground-floor commercial units (five on Level 1 along Front Street and three on Level 2 along the Riverwalk) totaling approximately 11,498 square feet, and 175 residential condominium units on the upper six floors. The Project's floor area ratio (FAR) would be 4.4, which is within the allowed FAR for the RVC land use designation established in the General Plan, which allows a FAR of up to 5 in the downtown area.

The proposed residential units include 53 studios, 89 one-bedroom units, and 33 two-bedroom units (approximately 118,285 square feet) on levels two through seven. In addition, the new buildings would include 2,489 square feet of amenity space for residents, such as a lounge, game room, and fitness space; 2,489 square feet of private rooftop outdoor space for the residential units; and 1,568 square feet of lobby space.

The three buildings would be arranged on the site from north to south and would be separated by two pedestrian passageways, providing two publicly accessible connections and plazas adjacent to the Riverwalk with about 15,493 square feet of new public space. The upper floors include "stepbacks" from the street and upper level outdoor deck for the residents. Conceptual Project building elevations that show a conceptual design are provided on Figures 3-2A and 3-2B of the DEIR.

The proposed building height is 81 feet with six stories above the ground floor. Per the Downtown Plan, a project that is located within Additional Height Zone B, is located on a parcel greater than 15,000 square feet and is eligible for a density bonus, is also eligible for additional height up to 70 feet and a maximum of five floors above commercial. The Project meets these requirements for additional height, and the additional 11 feet in height is requested as part of a proposed density bonus as explained in the DEIR.
(DEIR, p. 3-4 through 3-5.)

III.
ENVIRONMENTAL REVIEW PROCESS

In accordance with section 15082 of the CEQA Guidelines, the City issued a Notice of Preparation ("NOP") of a Draft EIR on November 20, 2019. Pursuant to CEQA Guidelines sections 15023, subdivision (c), and 15087, subdivision (f), the State Clearinghouse in the Office

of Planning and Research was responsible for distributing environmental documents to State agencies, departments, boards, and commissions for review and comment. The City followed required procedures with regard to distribution of the appropriate notices and environmental documents to the State Clearinghouse. The State Clearinghouse made that information available to interested agencies for review and comment. The NOP was circulated for a 30-day review period on November 20, 2019. Additionally, one EIR Scoping Meeting was held on December 4, 2019 to receive comments regarding the scope of issues to be addressed in the EIR. The NOP and all comments received on the NOP are presented in Appendix A of the Draft EIR. (DEIR, p. 1-7.)

The EIR includes an analysis of the following issue areas:

- Biological Resources
- Cultural and Tribal Cultural Resources
- Geology and Soils
- Energy Conservation
- Land Use
- CEQA-Required Sections: Significant Unavoidable Impacts, Significant Irreversible Changes, Growth Inducement, Cumulative Impacts, and Alternatives

On May 11, 2020, the City released the Draft EIR to public agencies, other interested parties, the general public, and the State Clearinghouse for a 45-day public review period that ended on June 24, 2020. (DEIR, p. 1-7.) The Final EIR was published on July 27, 2020. The Historic Preservation Commission held a public hearing on the historic alteration permit on August 5, 2020. The Planning Commission held a public hearing on the project and Final EIR on _____, 2020. The City Council held a public hearing on the project and Final EIR on _____, 2020.

IV.
RECORD OF PROCEEDINGS

In accordance with Public Resources Code section 21167.6, subdivision (e), the record of proceedings for the City's decision on the project includes the following documents:

The NOP (November 2019), including related comments from agencies, organizations and individuals, and all other public notices issued by the City in conjunction with the project;

The Draft EIR for the project (May 2020) and all appendices, as well as all documents cited or referenced therein;

The Final EIR for the project (July 2020) and all appendices, as well as all documents cited or referenced therein;

Any minutes and/or verbatim transcripts of all information sessions, public meetings, and public hearings held by the City in connection with the project;

Any documentary or other evidence submitted to the City at such information sessions, public meetings, and public hearings;

Any and all resolutions adopted by the City regarding the project, and all staff reports, analyses, and summaries related to the adoption of those resolutions;

Matters of common knowledge to the City, including, but not limited to federal, state, and local laws and regulations;

Any documents expressly cited in the Draft and Final EIRs and these findings, in addition to those cited above; and

Any other materials required for the record of proceedings by Public Resources Code section 21167.6, subdivision (e).

The City Council has relied on all of the documents listed above in reaching its decision on the project, even if not every document was formally presented to the City Council or City Staff as part of the City files generated in connection with the project. Without exception, any documents set forth above not found in the project files fall into one of two categories. Many of them reflect prior planning or legislative decisions of which the City Council was aware in approving the General Plan 2030 project. (See *City of Santa Cruz v. Local Agency Formation Commission* (1978) 76 Cal.App.3d 381, 391–392; *Dominey v. Department of Personnel Administration* (1988) 205 Cal.App.3d 729, 738, fn. 6.) Other documents informed the experts who provided advice to City Staff or consultants, who then provided advice to the City Council. For that reason, such documents form part of the underlying factual basis for the City Council's decisions relating to the adoption of the General Plan 2030. (See Pub. Resources Code, § 21167.6(e)(10); *Browning-Ferris Industries v. City Council of City of San Jose* (1986) 181 Cal.App.3d 852, 866; *Stanislaus Audubon Society, Inc. v. County of Stanislaus* (1995) 33 Cal.App.4th 144, 153, 155.1

The documents constituting the record of proceedings are available for review by responsible agencies and interested members by appointment at the City of Santa Cruz Planning and Community Development Department, 809 Center Street, Room 101, Santa Cruz, California 95060.

V.
FINDINGS REQUIRED UNDER CEQA

Public Resources Code section 21002 provides that "public agencies should not approve projects as proposed if there are feasible alternatives or feasible mitigation measures available which would substantially lessen the significant environmental effects of such projects[.]" The same statute provides that the procedures required by CEQA "are intended to assist public agencies in systematically identifying both the significant effects of projects and the feasible alternatives or feasible mitigation measures which will avoid or substantially lessen such significant effects." Section 21002 goes on to provide that "in the event [that] specific economic, social, or other

conditions make infeasible such project alternatives or such mitigation measures, individual projects may be approved in spite of one or more significant effects thereof."

The mandate and principles announced in Public Resources Code section 21002 are implemented, in part, through the requirement that agencies must adopt findings before approving projects for which EIRs are required. For each significant environmental effect identified in an EIR for a project, the approving agency must adopt a written finding reaching one or more of three permissible conclusions. The first such finding is that changes or alterations have been required in, or incorporated into, the project which avoid or substantially lessen the significant environmental effect as identified in the final EIR. The second permissible finding is that such changes or alterations are within the responsibility and jurisdiction of another public agency and not the agency making the finding. Such changes have been adopted by such other agency or can and should be adopted by such other agency. The third potential conclusion is that specific economic, legal, social, technological, or other considerations, including provision of employment opportunities for highly trained workers, make infeasible the mitigation measures or project alternatives identified in the final EIR. (CEQA Guidelines, § 15091, subd. (a).) Under CEQA, "feasible" means capable of being accomplished in a successful manner within a reasonable period of time, taking into account economic, environmental, social, legal, and technological factors. The concept of "feasibility" also encompasses the question of whether a particular alternative or mitigation measure promotes the underlying goals and objectives of a project. (*Sequoyah Hills*, *supra*, 23 Cal.App.4th at p. 715.) Moreover, "'feasibility' under CEQA encompasses 'desirability' to the extent that desirability is based on a reasonable balancing of the relevant economic, environmental, social, legal, and technological factors." (*City of Del Mar v. City of San Diego* (1982) 133 Cal.App.3d 410, 417 (*City of Del Mar*); see also *CNPS, supra,* 177 Cal.App.4th at pp. 1001–1002.)

For purposes of these findings, the term "avoid" refers to the effectiveness of one or more mitigation measures to reduce an otherwise significant effect to a less than significant level. In contrast, the term "substantially lessen" refers to the effectiveness of such measure or measures to substantially reduce the severity of a significant effect, but not to reduce that effect to a less than significant level. CEQA requires the lead agency to adopt feasible mitigation measures or, in some instances, feasible alternatives, to substantially lessen or avoid significant environmental impacts that would otherwise occur.

With respect to a project for which significant impacts are not avoided or substantially lessened, a public agency, after adopting proper findings, may nevertheless approve the project if the agency first adopts a statement of overriding considerations setting forth the specific reasons that the agency found the project's benefits outweigh its unavoidable adverse environmental effects. The City's Statement of Overriding Considerations for the project is included herein in Section IX, *infra*.

VI.
MITIGATION MONITORING AND REPORTING PROGRAM

A Mitigation Monitoring and Reporting Program (Exhibit B) has been prepared for the project, and will be approved by the City Council by the same Resolution that adopts these findings, if

the project is approved. The City will use the Mitigation Monitoring and Reporting Program to track compliance with project mitigation measures. The Mitigation Monitoring and Reporting Program will remain available for public review during the compliance period.

VII.
SIGNIFICANT EFFECTS AND MITIGATION MEASURES

The Draft EIR identified significant environmental effects (or impacts) resulting from the implementation of the Riverfront Project. Some of these effects, however, cannot be avoided by the adoption of feasible mitigation measures or alternatives. Thus, these effects will be significant and unavoidable. For reasons set forth in Section IX*, infra*, however, the City has determined that overriding considerations outweigh the significant, unavoidable effects associated with the Riverfront Project implementation.

The City's findings with respect to the project's significant effects and mitigation measures are set forth below for each significant impact. The following statement of findings does not attempt to describe the full analysis of each environmental impact contained in the EIR. Instead, it provides a summary description of each impact, describes the applicable mitigation measures identified in the Draft EIR or Final EIR and adopted by the City, and states the City's findings on the significance of each impact after imposition of the adopted mitigation measures, accompanied by a brief explanation. Full explanations of these environmental findings and conclusions can be found in the Draft EIR and Final EIR. These findings hereby incorporate by reference the discussion and analysis in those documents supporting the Final EIR's determinations regarding mitigation measures and the project's impacts and mitigation measures designed to address those impacts. In making these findings, the City Council ratifies, adopts, and incorporates into these findings the analysis and explanation in the Draft EIR and Final EIR and ratifies, adopts, and incorporates in these findings the determinations and conclusions of the Draft EIR and Final EIR relating to environmental impacts and mitigation measures, except to the extent any such determinations and conclusions are specifically and expressly modified by these findings.

Significant Impacts That Can Be Mitigated to a Less-Than-Significant Level

A. Biological Resources

Impact BIO-4:- Indirect Impacts to Nesting Birds. Future development as a result of the proposed Downtown Plan amendments could result in disturbance to nesting birds if any are present in the vicinity of construction sites along the San Lorenzo River.

The trees on and adjacent to the Project site provide potential nesting habitat for migratory birds; migratory birds are protected under the MBTA and California Fish and Game Code section 3503. The Project would require the removal of 25 trees on the Project site, river levee and along Front Street. Tree removal during the breeding season (generally March 1 to August 1) has the potential to destroy bird nests, eggs or chicks if

any are present during the removal. The Project would be subject to mitigation measures adopted with the Downtown Plan Amendments, which includes Mitigation Measure 4.3-3 requiring a pre-construction nesting survey be conducted by a qualified wildlife biologist if construction, including tree removal, adjacent to the San Lorenzo River is scheduled to begin during the nesting season. If nesting is identified, construction would need to be delayed or a suitable construction buffer established in order to prevent disturbance to any nesting birds. Therefore, the Project would result in a less-than-significant impact with implementation of mitigation as required in the Downtown Plan Amendments EIR.

Mitigation Measures. Implementation of Mitigation 4.3-3 identified in the Downtown Plan Amendments EIR will mitigate potential impacts of future development on biological resources (migratory birds and raptors) to a less-than-significant level. The measure has been revised as part of the Final EIR to reflect the nesting period for which pre-construction nesting surveys are required by the California Department of Fish and Wildlife in the Lake, Streambed Alteration Agreement with the City of Santa Cruz for maintenance activities along San Lorenzo River and other streams in the City.

> **DPA Mitigation 4.3-3.** Require that a pre-construction nesting survey be conducted by a qualified wildlife biologist if construction, including tree removal, adjacent to the San Lorenzo River is scheduled to begin between February 1 and September 1 to determine if nesting birds are in the vicinity of the construction sites. If nesting raptors or other nesting species protected under the MBTA are found, construction may need to be delayed until late-September or after the wildlife biologist has determined the nest is no longer in use or unless a suitable construction buffer zone can be identified by the biologist. (Citywide Creeks and Wetlands Management Plan Standard 12).

FINDING: The potentially significant impact of the Project on biological resources can be mitigated to a less-than-significant level by the imposition of DPA Mitigation 4.3-3, as revised in the FEIR, which has been required or incorporated into the project. The City hereby directs that this mitigation measure be adopted. Changes or alterations have been required in, or incorporated into, the Project which, avoid or substantially lessen the significant environmental effect as identified in the Final EIR.

Significant Unavoidable Impacts

B. Cultural and Tribal Cultural Resources

Impact CUL-1. Historical Resources. The proposed Project would cause a substantial adverse change in the significance of a historical resource due to demolition. This is a significant impact.

The proposed Project would result in demolition of two existing structures that are considered historic resources due to listing in the City's Historical Building Survey (428 Front Street) and for eligibility for listing in the California Register of Historical

Resources (both buildings). Based on review of the 2009 DPR forms and additional research and site documentation by Page & Turnbull in 2016, the buildings at 418 and 428 Front Street have been identified as buildings individually eligible for listing to the CRHR. As such, each building qualifies as an historical resource under CEQA.

According to CEQA, a "project with an effect that may cause a substantial adverse change in the significance of an historic resource is a project that may have a significant effect on the environment." Substantial adverse change is defined as: "physical demolition, destruction, relocation, or alteration of the resource or its immediate surroundings such that the significance of an historic resource would be materially impaired." The significance of an historical resource is materially impaired when a project "demolishes or materially alters in an adverse manner those physical characteristics of an historical resource that convey its historical significance" and that justify or account for its inclusion in, or eligibility for inclusion in, the California Register. Thus, the proposed Project would result in a substantial adverse change in the significance of the CEQA historical resources, due to demolition of both buildings in order to construct the proposed Project.

According to the State CEQA Guidelines section 15064.5(b)(3), generally, a project that follows the Secretary of the Interior's Standards for the Treatment of Historic Properties with Guidelines for Preserving, Rehabilitating, Restoring, and Reconstructing Historic Buildings or the Secretary of the Interior's Standards for Rehabilitation and Guidelines for Rehabilitating Historic Buildings (1995, Weeks and Grimmer), shall be considered as mitigated to a level of less than a significant impact on the historical resource. With designs that meet the Secretary of Interior's Standards, any impacts would be considered less than significant. In the present case, the buildings would be completely demolished and would not be restored or rehabilitated. Discussion of potential alternatives to preserve or restore the buildings is presented in Chapter 6.

Demolition of CEQA Historical Resources cannot be mitigated to a less-than-significant level, although mitigation measures can be required. Common mitigation measures for demolition consist of documentation of the resource, typically to the standards of the Historic American Buildings Survey (HABS) and/or interpretation that may include the installation of an interpretive display or video. Section 15126.4(b)(2) of the CEQA Guidelines is clear in this regard: "In some circumstances, documentation of an historical resource, by way of historic narrative, photographs or architectural drawings, as mitigation for the effects of demolition of the resource will not mitigate the effects to a point where clearly no significant effect on the environment would occur" (Page & Turnbull 2016).

Mitigation Measures. Implementation of Mitigations CUL-1 and CUL-2 identified in the EIR would reduce the impact on historical resources, but not to a less-than-significant level; therefore, the impact would remain significant and unavoidable.

Mitigation CUL-1. Complete documentation of buildings at 418 and 428 Front Street prior to alteration or demolition in accordance with Historic American Buildings Survey (HABS) standards, which includes the following:

- Project proponent shall work with a qualified architectural historian to prepare local-level HABS documentation, as detailed below. HABS level photographs must be completed prior to demolition and construction of the Project. The full HABS documentation must be complete prior to completion of the proposed Project. Copies of the HABS shall be provided to local Santa Cruz repositories.
- *Measured Drawings:* Select existing drawings, where available, should be reproduced on mylar. If existing historic drawings do not exist, a digital and hard copy set of measured drawings that depict the existing size, scale, and dimension of the subject property shall be produced. The measured drawing set shall include a site plan, sections, and other drawings as needed to depict existing conditions of the property. The scope of the drawing package will be reviewed and approved by local Planning Department staff prior to commencement of the task. All drawings shall be created according to the latest HABS Drawings Guidelines by the National Park Service. The measured drawings shall be produced by a qualified professional who meets the standards for architecture set forth by the Secretary of the Interior's Professional Qualification Standards (36 Code of Federal Regulations, Part 61).
- *HABS-Level Photographs:* Black and white large format negatives and prints of the interior, exterior, and setting of the subject property shall be produced. The photographs must adequately document the character-defining features and setting of the historic resource. Planning Department staff will review and approve the scope (including views and number) of photographs required prior to the commencement of this task. All photography shall be conducted according to the latest HABS Photography Guidelines by the National Park Service. The photographs shall be produced by a qualified professional photographer with demonstrated experience in HABS photography.
- *HABS Historical Report:* A written narrative historical report, per HABS Historic Report Guidelines, shall be produced. The report shall include historical information, including the physical history and historic context of the building, and an architectural description of the site setting, exterior, and interior of the building. The report shall be prepared by a qualified professional who meets the standards for history or architectural history set forth by the Secretary of the Interior's Professional Qualification Standards (36 Code of Federal Regulations, Part 61). Archival copies of the drawings, photographs, and report shall be submitted to the Planning Department, and to repositories including but not limited to the San Francisco Public Library, Northwest Information Center, and California Historical Society. This mitigation measure would create a collection of

reference materials that would be available to the public and inform future research.

Mitigation CUL-2. Prior to the start of Project construction and demolition, the Project proponent shall hire a qualified architectural historian to create an interpretative display plan that addresses the historical significance of the two historical buildings that are being demolished. The interpretative display must be located within the proposed Project boundary along a pedestrian walkway or attached to the new building so that it is visible to the general public. Interpretation typically involves development of interpretive displays about the history of the affected historical resources. These displays may include a high-quality permanent digital interpretive website, or a temporary exhibition or interpretive display installed at a local cultural institution or publicly accessible location on or near the Project site. The interpretive displays illustrate the contextual history and the architecture of the buildings, and of the general building typology (e.g. Commercial Buildings Design in the Automobile Age), and shall include, but not be limited to, historic and contemporary photographs, narrative text, historic news articles and memorabilia, salvaged materials, and maps.

FINDING: The potentially significant impact of the Project on historical resources cannot be mitigated to a less-than-significant level despite the imposition of Mitigations CUL-1 and CUL-2, which have been required or incorporated into the Project. The City hereby directs that this mitigation measure be adopted. Specific economic, legal, social, technological, or other considerations make infeasible any additional mitigation measures or the project alternatives identified in the EIR that would avoid or reduce the significant impact on historical resources to a less-than-significant level.

VIII.
PROJECT ALTERNATIVES

A. Basis for Alternatives-Feasibility Analysis

As noted earlier, Public Resources Code section 21002 provides that "public agencies should not approve projects as proposed if there are feasible alternatives or feasible mitigation measures available which would substantially lessen the significant environmental effects of such projects[.]" Where a lead agency has determined that, even after the adoption of all feasible mitigation measures, a project as proposed will still cause one or more significant environmental effects that cannot be substantially lessened or avoided, the agency, prior to approving the project as mitigated, must first determine whether, with respect to such impacts, there remain any project alternatives that are both environmentally superior and feasible within the meaning of CEQA. Although an EIR must evaluate this range of *potentially* feasible alternatives, an agency decision-making body may ultimately conclude that a potentially feasible alternative is actually infeasible. (*CNPS*, *supra*, 177 Cal.App.4th at p. 981, 999.) As explained earlier, grounds for such a conclusion might be the failure of an alternative to fully satisfy project objectives deemed

to be important by decision-makers, or the fact that an alternative fails to promote policy objectives of concern to such decision-makers. (*Id.* at pp. 992, 1000–1003.) Alternatives may also be determined to be economically infeasible and can be rejected on that ground. (*The Flanders Foundation v. City of Carmel-by-the-Sea* (2012) 202 Cal.App.4th 603, 621–623.) Thus, even if a project alternative will avoid or substantially lessen any of the significant environmental effects of a proposed project as mitigated, the decision-makers may reject the alternative as infeasible for such reasons.

Under CEQA Guidelines section 15126.6, the alternatives to be discussed in detail in an EIR should be able to "feasibly attain most of the basic objectives of the project[.]" For this reason, the objectives described above in section II(C) of these findings provided the framework for defining possible alternatives. Based on the objectives, the City developed two alternatives in addition to the No Project Alternative that were addressed in detail in the Draft EIR.

Per CEQA Guidelines section 15126.6 and the project's objectives, the following alternatives to the project were identified:

- No Project – Required by CEQA
- Alternative 1 – Partial Preservation – Incorporation of Building Facades into Project
- Alternative 2 – Relocation of Historic Buildings

The City Council finds that that a good faith effort was made to evaluate a range of potentially feasible alternatives in the EIR that are reasonable alternatives to the project and could feasibly obtain most of the basic objectives of the project, even when the alternatives might impede the attainment of the project's objectives and might be more costly. Alternatives were considered that would result in a substantial reduction or elimination of identified significant unavoidable historical resources impacts, as well as the one identified significant impact that could be reduced to a less-than-significant level with mitigation measures outlined in this EIR. (DEIR, pp. 6-7 to 6-15.)

1. Significant Unavoidable Impacts of the Project

Approval of the project will result in the following significant unavoidable impact, which can be lessened, though not avoided or reduced to a less-than-significant level, through implementation of feasible mitigation measures adopted in connection with the project:

Cultural and Tribal Cultural Resoures. Historical resources as described in section VI(B) above.

2. Scope of Necessary Findings and Considerations for Project Alternatives

As noted above, these findings address whether the various alternatives substantially lessen or avoid any of the significant unavoidable impacts associated with the Riverfront Project and also consider the feasibility of each alternative. Under CEQA, "[f]easible means capable of being accomplished in a successful manner within a reasonable period of time, taking into account

economic, environmental, legal, social, and technological factors." (CEQA Guidelines, § 15364.) As explained earlier, the concept of feasibility permits agency decision makers to consider the extent to which an alternative is able to meet some or all of a project's objectives. In addition, the definition of feasibility encompasses "desirability" to the extent that an agency's determination of infeasibility represents a reasonable balancing of competing economic, environmental, social, and technological factors supported by substantial evidence.

B. Description of Project Alternatives and Determination of Feasibility

Potential alternatives to the proposed Riverfront Project were evaluated with respect to the objectives of the project as discussed in Chapter 6, "Project Alternatives" of the Draft EIR and this section of the findings. The Draft EIR identified and compared in detail the environmental effects of the No Project Alternative and two alternatives listed below with environmental impacts resulting from the project. (See DEIR, pp. 6-7 through 6-15.)

The range of alternatives selected by the City is reasonable given the proposed uses, identified significant impacts and project objectives. The No Project Alternative would avoid all impacts identified for the proposed Project. Of the other alternatives considered, both Alternatives 1 and 2 would lessen the significant unavoidable historical resource impact than would occur with the proposed Project. Alternative 2 could potentially lessen the impact to a less-than-significant level, although there is the possibility that the reconstructed and rehabilitated historical buildings under this alternative may not meet the Secretary of Interior Standards for Reconstruction, and therefore, the impact may remain significant and unavoidable. Of the alternatives considered, Alternative 1 would best achieve project objectives, while also reducing the severity of identified significant impacts and therefore, is considered the environmentally superior alternative of the alternatives reviewed. While Alternative 2 would also lessen the severity of the historical resource impact, it was acknowledged to be potentially infeasible in the DEIR due to lack of identified sites to relocate the historic buildings. A comparison of project features and impacts between the proposed Project and the alternatives is presented in Table 6-1 in the DEIR.

NO PROJECT ALTERNATIVE

1. Description

Section 15126.6(e) of the State CEQA Guidelines requires that the impacts of a "no project" alternative be evaluated in comparison to the proposed project. Section 15126(e) also requires that the No Project Alternative discuss the existing conditions that were in effect at the time the Notice of Preparation was published, as well as what would be reasonably expected to occur in the foreseeable future if the project were not approved, based on current plans and consistent with available infrastructure and community services.

For the purpose of the Alternatives discussion, the No Project Alternative assumes that in the foreseeable future, another project to redevelop the site could be proposed. However, it is noted that no redevelopment of the Project site would be inconsistent with the General Plan and Downtown Plan forecasts and intentions for redevelopment of the site and Project area. Given

adopted City plans for the area, another development project may be proposed for the Project site in the future, although the type and amount of development that may be proposed is unknown at this time.

2. Analysis of No Project Alternative's Ability to Reduce Significant Unavoidable Project Impacts

Table 6-1 of the Draft EIR provides a comparison of impacts between the project and alternatives. The No Project Alternative would not result in construction of the proposed Project and none of the impacts identified in the EIR would occur. No new significant impacts would occur under this alternative. Since redevelopment of the downtown area, including the Project properties, is encouraged in the City's adopted Downtown Plan to provide additional residential uses, it is likely that some form of a mixed-used commercial-residential project would be proposed at some point in the future, although the type and timing of such a project are not known. However, some of the impacts identified in this EIR could result at some unknown time in the future and at an unknown magnitude depending on the development proposal. It is also noted that there are some public improvements and amenities proposed as part of the Project that would not occur under the No Project Alternative, e.g., improved access to the Santa Cruz Riverwalk and an expanded outdoor river area. Thus, the No Project Alternative would not accomplish goals set forth in the Downtown Plan regarding improvements along the Riverwalk, including improved access.

3. Feasibility of No Project Alternative

The No Project alternative would not meet any of the Project objectives.

The No Project Alternative is rejected as infeasible because this alternative would not meet any of the project objectives and would not fulfill the Downtown Plan's goals to provide additional residential units within the plan area. For the foregoing reasons, the City Council determines that the No Project Alternative is infeasible and declines to adopt it.

ALTERNATIVE 1 (Partial Preservation – Incorporation of Building Facades into Project)

1. Description

Alternative 1 involves the partial preservation of the existing historic buildings on the site through retention of the primary historic building facades and incorporating them into the new building. This alternative would involve the preservation of the primary street facades and the demolition of all secondary facades, structure, foundations, and roofs. The street facades would be disassembled in eight- to ten-foot-wide segments, stored at a different location, and re-assembled and incorporated into the Project after completion of subsurface work. As indicated above, it is not possible to retain the facades in place during construction. Under this alternative, there would be no change to the proposed Project uses and site layout, except the design would be altered to incorporate the building facades of the existing on-site historic buildings.

2. Analysis of Alternative 1's Ability to Reduce Significant Unavoidable Project Impacts

Table 6-1 of the Draft EIR provides a comparison of impacts between the project and alternatives. Under this alternative, the identified significant unavoidable impact related to historical resources would be slightly lessened, but would not be reduced to a less-than-significant level. The biological resource and geology/soils impacts would not change. No new significant impacts would occur under this alternative.

3. Feasibility of Alternative 1

Under this alternative, there would be no change to the proposed Project uses and site layout, except the design would be altered to incorporate the building facades of the existing on-site historic buildings. This alternative was determined in the DEIR to meet all Project objectives, although it was acknowledged that it may not meet Objective #10 regarding maintaining a financially viable project. Although Alternative 1 would retain a number of character-defining features of the historic resources, it would not retain the buildings' character-defining massing or height as volumetric structures. Thus, the buildings' significant architectural styles would be conveyed in the features of their facades, but their representation as whole buildings would be compromised. Furthermore, the massing, size, and scale of the new seven-story buildings to be constructed behind the historic primary façades would not be compatible with the one-story historic resources, and the Project would not be in compliance with the Secretary of the Interior's Standards for Rehabilitation. In addition, it would not be feasible to reconstruct the facades in the exact locations of the existing buildings without requiring a new opening to be provided in order to accommodate the mid-block passageway. For these reasons, Alternative 1 would at best only slightly lessen the significant impact of the Project. The facades of the existing buildings are made of various elements that have been altered over time with concrete, and this alternative would require the bracing of the facades, the removal of the roof structures (since they are fully or partially supported by the walls), the disassembly of the walls into 8 to 10 feet wide elements, hauling the elements offsite for storage during construction, and the re-assembly and incorporation into the new building once the subsurface work is completed. This would also require the strengthening of these elements to meet current codes (which entails the placement of a gunnite/shotcrete wall on the inside face of the façade that would serve as a support structure to stitch the various 8 to 10 feet elements (FBA Inc. 2019). Review by the Project structural engineer indicates that this process can be accomplished, however, the overall cost of the process is approximately $1 million, which would add substantially to the cost of constructing the Project but is unlikely to result in any corresponding increase in the value or sales price of the individual units. . (Letter from SC Riverfront, LLC, August 11, 2020.) The substantial additional cost of this alternative as compared to the cost of the proposed Project are so great that a reasonably prudent property owner would not proceed with the alternative. Additionally, since March 2020, the COVID 19 pandemic has resulted in a very substantial disruption of the economy and financial markets, and this economic disruption and ongoing uncertainty regarding the criteria for and availability of construction financing seem likely to persist for some time into the future. As a result, the costs for implementing Alternative 1 likely will have an even greater negative impact on Project feasibility than would have been likely under pre-COVID-19 conditions. For the foregoing reasons the City Council determines that Alternative 1 would not

substantially lessen the significant impact associated with demolition of historic resources and, in the alternative, is infeasible and is hereby rejected.

ALTERNATIVE 2 (Relocation of Historic Buildings)

1. Description

Alternative 2 involves the relocation of the two historic buildings to a new site. Under this alternative, there would be no change to the proposed Project uses and site layout. Due to the nature of the historic buildings' perimeter concrete and CMU walls on non-structural slabs on grade, this alternative would involve deconstruction followed by reconstruction. More specifically, it would involve vertical shoring and bracing of the structures' roofs and walls; removal of existing roofing material; salvaging the roof beams, trusses, and interior columns and supports; and disassembly of all perimeter walls into eight- to ten-foot sections. These materials would be delivered to a new site. Floor slabs, non-structural partition walls, and existing foundations would be demolished and recycled. New foundations and floor slabs would be built at the new site, and all salvaged elements would be reassembled. The buildings would be reconstructed as close to their original forms as possible, while upgrading the buildings to meet current building codes.

2. Analysis of Alternative 2's Ability to Reduce Significant Unavoidable Project Impacts

Table 6-1 of the Draft EIR provides a comparison of impacts between the project and alternatives. Under this alternative, the identified significant unavoidable impact related to historical resources would be substantially lessened and potentially reduced to a less-than-significant impact if the relocated structures could comply with the Secretary of Interior Standards for Reconstruction, but if not, the impact would not be reduced to a less-than-significant level.
The biological resource and geology/soils impacts would not change. No new significant impacts would occur under this alternative.

3. Feasibility of Alternative 2

Under this alternative, there would be no change to the proposed Project uses and site layout. This alternative was determined in the DEIR to meet all Project objectives, except it was acknowledged that it may not meet Objective #10 regarding maintaining a financially viable project. The new location would need to be similar to the existing historic setting which is downtown Santa Cruz. There are no known vacant properties in the downtown area that are not part of a planned future development. Other properties in the vicinity of the Project site that are also located adjacent to the San Lorenzo River are currently developed and/or could be redeveloped in the future under the City's adopted *Downtown Plan*. Therefore, it appears that there are no downtown sites that could accommodate relocation of the two structures. In addition, there are no other nearby sites owned by or potentially available to the applicant that could be used. Another key factor in determining the feasibility of relocation as a viable

alternative is determining if the buildings can be physically moved. Moving the buildings would entail vertical shoring and bracing of the structure's roofs and walls, the removal of existing roofing material, the salvaging of roofs beams, purlins, trusses, and interior columns/supports, the disassembly of all perimeter walls into 8 to 10 feet sections and transporting and re-erecting the structures at a new location site. Floor slabs, non-structural partition walls, and existing foundation will be demolished and recycled. A new foundation and floor slab will be built at the new site, and all salvaged elements will be reassembled to bring the buildings to their original forms as close as possible while upgrading the buildings to standards that are acceptable to the local building official. While this option is theoretically possible, review by the Project structural engineer concluded that it may not be economically or logistically feasible due to the nature of the existing structures (size, material used, and type of construction). A preliminary estimate to disassemble, move, re-assemble, and bring to near current standard is approximately $10.5 million, which would add substantially to the cost of constructing the Project but is unlikely to result in any corresponding increase in the value or sales price of the individual units. (Letter from SC Riverfront, LLC, August 11, 2020.) The substantial additional cost of this alternative as compared to the cost of the proposed Project are so great that a reasonably prudent property owner would not proceed with the alternative. In addition, since March 2020, the COVID 19 pandemic has resulted in a very substantial disruption of the economy and financial markets, and this economic disruption and ongoing uncertainty regarding the criteria for and availability of construction financing seem likely to persist for some time into the future. As a result, the significantly higher costs to implement Alternative 2, even assuming an acceptable alternative site were available, are likely to have an even greater impact on Project feasibility than would have been likely under pre-COVID -19 conditions. For the foregoing reasons, the City Council determines that Alternative 2 is infeasible and is hereby rejected.

IX.
STATEMENT OF OVERRIDING CONSIDERATIONS

As set forth in the preceding sections, approving the Riverfront Project will result in some significant adverse environmental effects that cannot be avoided even with the adoption of all feasible mitigation measures. (See section VII, *supra.*) As determined above, however, there are no feasible alternatives to the project that would fully mitigate or substantially lessen the impacts. Despite these effects, the City Council, in accordance with CEQA Guidelines section 15093, chooses to approve the project because, in its judgment, the following economic, social, and other benefits that the project will produce will render the significant effects acceptable.

Any one of these reasons, on its own, is sufficient to justify approval of the project. Thus, even if a court were to conclude that not every reason is supported by substantial evidence, the City would stand by its determination that each remaining individual reason is sufficient. The substantial evidence supporting the various benefits can be found in the preceding findings, which are incorporated by reference into this section, and in the documents included in the Record of Proceedings, as defined in Section IV, above.

1) The State of California has adopted AB 32 Global Warming Solutions Act (2006) and SB375 (Sustainable Communities and Climate Protection Act (2008) with specific

emphasis on promoting transit-oriented development and to link land use planning development decisions with transportation. The goal of these measures is to reduce vehicle miles traveled and thereby reduce Greenhouse Gas Emissions (GHG) through better land use planning. The project represents sound land use planning principles with direct connections being made between increasing density for needed housing in the City and existing nearby transit facilities and commercial uses. The project aligns with the Association of Monterey Bay Area Government (AMBAG) Sustainable Communities Strategy Implementation Project that focuses on infill housing, transportation strategies and measures, and economic development. The project will directly implement many General Plan policies and actions that encourage land use changes that reduce automobile use (Policy LU4.2), encourage mixed uses (Policies LU3.5, LU3.10, LU3.10.1), and encourage the assembly of small parcels along transit (CD3.3, CD3.3.1, CD3.3.2). The project achieves these goals and policies through the consolidation of parcels and construction of residential units above ground floor commercial on an infill site located directly adjacent to the metro transit center and within walking and biking distance to a variety of good, services, employment, and recreational opportunities.

2) As set forth in Government Code section 65580, the City has a responsibility to facilitate the development of housing to make adequate provision for the housing needs of all economic segments of the community. Similarly, CEQA recognizes the importance of balancing the prevention of environmental damage with the provision of a "decent home and satisfying living environment for every Californian." (Pub. Resources Code, § 21000(g).) The project supports the City's long-range plan for meeting regional housing needs, during the present and future housing cycles, while balancing environmental, economic, and fiscal factors and community goals. The project would redevelop an underutilized site, encouraging infill development at a higher density and/or land use intensity. The project is consistent with Goals 1 and 2 of the City's Housing Element in that it would provide a variety of diversity of unit types including 53 studios, 89 one-bedroom units, and 33 two-bedroom units as condominiums and at varying affordability levels, including 15 units reserved for very-low income households and five units reserved for low income households as part of the developer-requester density bonus. The project is consistent with Goal 5 of the Housing Element which seeks to improve housing and the vitality of neighborhoods throughout Santa Cruz by providing adequate public services, community facilities, infrastructure, landscaping and open space, adequate parking, pedestrian and bike routes, as well as eliminating blighted conditions. The project will greatly enhance the existing conditions on the Riverwalk through the establishment of expanded, landscaped, public open space and river-facing residences and commercial spaces.

3) The project supports the community's vision as provided in the General Plan, the Downtown Plan, and the San Lorenzo Urban River Plan for providing pedestrian connections between the downtown and the Santa Cruz Riverwalk and will facilitate improvements to the physical, social, economic, cultural, and environmental character of the downtown. Achieving these connections is a superior benefit over and above the associated significant and unavoidable historical resources impacts that would be associated with the project. The project will enhance opportunities to view and interact

with the San Lorenzo River as a coastal resource, as described in the Downtown Plan Planning Principles and Strategies. The project is designed to be visually compatible with the surrounding downtown, while providing new open space pedestrian plazas and passageways to the Riverwalk which is directly consistent with the First Principles of the Downtown Plan for building height, form and character, and open space/streetscape. The filling of the area adjacent to the levee and associated required landscaping and public project further implements the policies and goals of the Downtown Plan to make the improvement of the riverfront and creation of linkages to the downtown a top priority in that the use of these areas will achieve stewardship and scenic values over the existing conditions near the Riverwalk. The project supports the Coastal Act Scenic and Visual Protection Policy Section 30251 to protect and increase opportunities for viewing the river, a coastal resource. The development will not obstruct public views to the San Lorenzo River from downtown because the levee is an average of about 10 feet above the Front Street sidewalk and already obstructs the view of the river, but the project will increase the ability and opportunities for the public to view the river from the expanded and improved Riverwalk area. A prior policy of the San Lorenzo Urban River Plan (SLURP) specified that new development should maintain views from both taller downtown buildings to the river and from the river trail to distant mountains and ridges, avoiding creation of a development "wall" between the downtown and the River. This policy was eliminated in 2017 and it was noted that the Riverwalk path creates the view corridor. The proposed project will not impact the public, scenic view of the river from the Riverwalk, which is consistent with the amended SLURP.

4) While the CEQA evaluation process for projects has been established to identify adverse impacts to the physical environment, it is only one criterion for a jurisdiction to consider when evaluating the merits of a project. The CEQA process does not identify positive effects on the environment and therefore, is limited in its application when evaluating the full range of changes resulting from land use decisions at a local level. The project contains many positive environmental impacts including: the creation of a transit-oriented development in the downtown, which will directly lead to a reduction in vehicle miles traveled and fewer GHG emissions per capita than development located further away from transit opportunities; improvements to the Riverwalk that will increase public activity along the river; fill adjacent to the river levee to eliminate areas that encourage negative social behavior and degrade and create an unsafe experience for Riverwalk users; the development of restaurants, cafés and other proposed commercial spaces along the Riverwalk that result in economic development for public uses adjacent to the Riverwalk; and finally, increased opportunities for much-needed housing near the City's job centers. The project would result in redevelopment in an area of the City that is designated for that purpose. This combination of positive impacts is one reason that the City finds the benefits outweigh the identified unavoidable environmental impacts in the EIR.

X.
CONCLUSION

As explained earlier, the City Council has balanced these benefits and considerations against the significant unavoidable environmental effects of the project. The City Council hereby concludes

that those impacts are outweighed by these benefits, among others. After balancing the environmental costs against the project's benefits, the City concludes that the benefits outweigh the few adverse environmental impacts. The City believes that the project's benefits outlined above override the significant unavoidable environmental costs associated with the project.

DRAFT RESOLUTION NO.

RESOLUTION OF THE CITY COUNCIL OF THE CITY OF SANTA CRUZ APPROVING A COASTAL PERMIT, NON-RESIDENTIAL DEMOLITION AUTHORIZATION PERMIT, DESIGN PERMIT, TENTATIVE MAP, SPECIAL USE PERMIT, ADMINISTRATIVE USE PERMIT, REVOCABLE LICENSE FOR OUTDOOR EXTENSION AREA, HERITAGE TREE REMOVAL PERMIT, AND STREET TREE REMOVAL TO REMOVE ONE STREET TREE AND THREE HERITAGE TREES, TO COMBINE FIVE PARCELS, DEMOLISH THREE COMMERCIAL BUILDINGS INCLUDING TWO HISTORIC COMMERCIAL BUILDINGS, AND TO CONSTRUCT A SEVEN-STORY, MIXED-USE BUILDING WITH 175 RESIDENTIAL CONDOS AND 11,498 SQUARE FEET OF GROUND FLOOR AND LEVEE FRONT COMMERCIAL SPACE ON PROPERTY LOCATED WITHIN THE CBD/CZ-O/FP-O ZONE DISTRICT (CENTRAL BUSINESS DISTRICT, COASTAL ZONE OVERLAY, FLOODPLAIN OVERLAY) AND WITHIN THE FRONT STREET/RIVERFRONT SUBAREA OF THE DOWNTOWN PLAN. (APPLICATION NO. CP18-0153)

WHEREAS, SC Riverfront LLC, applicant for properties located at 418, 428, 440, 504, & 508 Front Street ("applicant"), also known as Assessor's Parcel Numbers 005-151-22, -30, -31, -39, and -50 have applied for a Coastal Permit, Non-Residential Demolition Authorization Permit, Design Permit, Tentative Map, Special Use Permit, Administrative Use Permit, Revocable License for Outdoor Extension Area, Heritage Tree Removal Permit, and Street Tree Removal for the proposed mixed-use building with 175 residential condominiums and 11,498 square feet of commercial space, residential amenity space, and Riverwalk improvements; and

WHEREAS, the project site and its development is governed by the standards and guidelines contained in Municipal Code Titles 23 and 24, the Subdivision and Zoning Ordinances, and the Downtown Plan; and

WHEREAS, the application has undergone environmental review in accordance with the California Environmental Quality Act (CEQA) and the State CEQA Guidelines; and

WHEREAS, more specifically, an Environmental Impact Report (EIR) was prepared and circulated for a 45-day review period which ended on June 24, 2020, and a Final EIR was issued on July 27, 2020; and

WHEREAS, the Historic Preservation Commission conducted a public hearing on August 5, 2020, and voted 5-1-1 to recommended certification of the EIR and approval of the Nonresidential Demolition Authorization Permits with the condition that the front facades of the historic buildings are replicated on the front façade of the mixed-use building; and

WHEREAS, the Planning Commission conducted a public hearing on September 2, 2020, and recommended _____; and

WHEREAS, the City Council adopted separate resolutions to certify the EIR and adopt environmental findings and a Mitigation Monitoring Program; and

WHEREAS, the City Council now makes the following findings:

<u>With respect to the Nonresidential Demolition Authorization Permit, Section 24.08.1230 for the demolition of three buildings.</u>

1. **The cultural resources evaluation is accepted as accurate and complete; and the cultural resources evaluation concludes that the building or structure is not eligible for listing on the city historic building survey.**

   The project includes the demolition of three buildings. None of the buildings are listed in the City's Historic Building Survey, the California Register of Historic Resources or the National Register of Historic Places and the parcels are not located in any Historic Districts.

   A Historic Evaluation for the property at 504 Front Street was prepared for the project by Seth Bergstein of *Past Consultants*, who meets the Secretary of the Interior's Professional Qualifications Standards in Architectural History and History. The report makes the following conclusion:

   > *The property contains a commercial building constructed in two building campaigns. The first structure was completed in 1939 for the new location of Sweet Service Company, a wholesale and retail auto parts store. The operation gained further success and the owners constructed an addition to the south wall of the original building in 1957. Sweet Service Company stayed in operation until the early 1980s, when the building became subdivided for other local commercial businesses. Significant remodeling campaigns in 2004 and 2007 installed new entrances, fenestration, detailing and stucco wall cladding on the front (west) and primary elevation. Given the changes made to the original design, the building no longer possesses sufficient integrity of design, setting, materials, workmanship, feeling and association for it to qualify for listing on the National Register of Historic Places or the California Register of Historical Resources. The subject building is not eligible for the Santa Cruz Historic Resources Inventory because it does not meet City preservation criteria and has been altered substantially.*

   Therefore, the building is not eligible for listing on the city's historic building survey.

   The buildings at 418 and 428 Front Street were determined to be eligible for listing in 2009 with the preparation of Volume III of the Historic Building Survey, however, at the time, the property owners opted-out of listing the structures. A Historic Resources Memorandum, Significance Diagrams, and an Alternatives Analysis was prepared for the project by *Page & Turnbull*, an architectural and historic preservation firm that meets the professional qualification standards used by the *National Park Service* (published in the Code of Federal Regulations, 36 CFR Part 61). The memorandum evaluates the previously prepared DPR's for the subject sites, as well as the history, architecture, and characteristics of the buildings

at 418 and 428 Front Street and the implications of demolition of the buildings under CEQA, including recommendations for mitigation. The report includes Significance Diagrams that identify the primary, secondary, and non-contributing character-defining features. An additional Alternatives Analysis Memo provides recommendations for alternatives to explore in the Environmental Impact Report. For the above reasons, the cultural resources evaluation that was submitted for the subject properties is accepted as accurate and complete.

The DPR's and the report that was completed by *Page & Turnbull* conclude that both sites are eligible for listing on the California Register of Historic Resources. Therefore, pursuant to section 24.08.1230(2)(e), the appropriate environmental review has been completed in accordance with the California Environmental Quality Act to address the proposed demolition of two historic structures that are eligible for listing.

Finding 4 below, articulates why the City is approving demolition of the two buildings deemed eligible for listing on the California Register of Historic Resources.

2. **The project which will replace the demolished building or structure has been, or is concurrently being, approved by the city, and an appropriate building permit has been, or is concurrently being, issued; unless some other practical hardship can be documented rendering this requirement inappropriate.**

The project that replaces the demolished buildings is concurrently being reviewed by the city and a standard condition of approval is included that requires the demolition permit to be issued concurrently with the building permit for the new development.

3. **The property owner has been advised of the benefits of listing the property on the city historic building survey and incorporating the preservation of the historic resource into the proposed project.**

The property owner has been advised of the benefits of listing the properties and incorporating the preservation of the historic resources into the proposed project. None of the alternatives identified in the Environmental Impact Report are feasible to reduce the impacts to the historic buildings to a less-than-significant level and to allow for construction of the project which implements several General Plan/Local Coastal Program policies, including those in the Downtown Plan. On August 5, 2020, the Historic Preservation Commission voted 5-1-1 to recommend that the facades of the historic buildings at 418 and 428 Front Street are incorporated into the front elevation of the proposed building, regardless of the fact that general building replication does not conform to the Secretary of the Interior's Standards for the treatment of historic properties. The developer has reviewed the historic evaluations prepared by the project historian and has chosen to replicate most of the primary historic characteristics of each building on the front facades including the stepped cornice, curved parapet, and art deco detailing on the building at 418 Front Street and the streamlined horizontality and tile accents on the building at 428 Front Street.

4. **The cultural resources evaluation determines that the resource is eligible for listing on the city historic building survey, appropriate environmental review has been completed in accordance with the California Environmental Quality Act, and the City Council can make a finding of overriding consideration that the replacement project will have public benefits which will outweigh the impact of loss of the historic resource.**

   Cultural resources evaluations were prepared for each building to be demolished and the evaluations concluded that the buildings on the properties at 418 and 428 Front Street are eligible for listing on the city historic building survey and on the California Register of Historic Resources (CRHR). The demolition of a historic resource results in a substantial adverse change in the significance of that resource and is therefore considered to have a significant effect on the environment (CEQA Guidelines Section 21084.1). An Environmental Impact Report (EIR) was prepared for the project and three alternatives were evaluated for feasibility including: 1) No Project Alternative; 2) Partial Preservation, and 3) Relocation of Historic Buildings. A Finding of Overriding Consideration has been made to support the project in that neither of the recommended mitigation measures nor any of the project alternatives would reduce the impacts to a less-than-significant level and feasibly allow for the construction of project which implements several General Plan/LCP policies, including those in the Downtown Plan.

With respect to the Design Permit, Section 24.08.430 for the construction of a multi-family building greater than 50 feet in height in the CBD district.

5. **The site plan shall be consistent with physical development policies of the General Plan, any required or optional element of the General Plan, any area plan or specific plan or other city policy for physical development. If located in the Coastal Zone, a site plan shall also be consistent with policies of the Local Coastal Program.**

   The project site is designated as RVC/Downtown Santa Cruz (Regional Visitor Commercial) in the General Plan and is located within the CBD (Central Business District) zone district. The entire project site is located in the Front Street Riverfront Corridor of the Downtown Plan. The RVC/Downtown Santa Cruz General Plan designation is intended to emphasize a mix of uses such as office and retail uses, residential and mixed-use developments, restaurants, and visitor attractions and the CBD zone district is a zone that is intended to implement the objectives of the Downtown Plan. The proposed use of the parcel as a mixed-use commercial/residential project is consistent with the intent of the CBD zone district and the RVC/Downtown Santa Cruz designation, and the proposal to fill the area between the building and the San Lorenzo River levee to expand the Riverwalk area and create additional public open space that highlights the river as a downtown amenity is consistent with the following goals and policies of the General Plan, the Local Coastal Program, the Downtown Plan, and the San Lorenzo Urban River Plan (SLURP):

   GENERAL PLAN AND LOCAL COASTAL PROGRAM 1990-2005

- GOAL EQ 1: Protect City residents from the health hazards of air pollution and maintain high air quality standards by implementing air quality monitoring and control strategies that comply with State and Federal Clean Air Acts.
- GOAL EQ 2: Protect water quality of ocean, watershed lands, surface waters and ground water recharge areas from sedimentation, pollution, and salt-water intrusion
- GOAL EQ 5: Implement, to the greatest degree possible, transportation strategies that reduce the consumption of fossil fuels, and energy strategies that increase energy-efficiency and energy conservation in all sectors of energy usage and which increase the production and use of renewable energy sources within the City.
- GOAL L2: Provide for a variety and balance of residential, commercial, and industrial land uses while protecting environmental resources and responding to changing community needs, interests, and development constraints.
- GOAL L3: Protect the quality of, and prevent significant new incursion of urban development into, areas designated as open space or agricultural lands and provide, when possible, permanent protection of these lands, recognizing their value in inhibiting urban sprawl and maintaining City identity, as a natural resource with significant biotic resources and/or their potential for providing scenic, recreational and educational enjoyment.
- GOAL L4: Plan community facilities and services to serve the projected population, allowing development only when adequate facilities and services are provided and are available to serve it.
- GOAL L5: Develop compatible relationships between land-use and circulation patterns and encourage land use patterns that encourage an efficient transportation system and discourage urban sprawl and excessive dependence on the automobile.
- GOAL CD2: Protect and enhance the City's natural setting and scenic resources.
- GOAL C1: Develop a comprehensive, multi-modal circulation planning program that takes as its highest priority reduction of automobile trips by the creation of viable alternative transportation modes, effective transportation systems management programs, and integration of land-use and circulation planning.
- GOAL C2: Develop and promote pedestrian travel as a viable transportation mode by developing and maintaining a safe, comprehensive, convenient, accessible and aesthetically pleasing pedestrian system.
- GOAL ED4: Promote revitalization of the Downtown Central Business District as the City's center for commerce, office, culture, entertainment restaurant activity, and mixed use residential.
- GOAL PR2: Ensure that adequate types, numbers and distribution of recreational facilities are available to residents of Santa Cruz.

GENERAL PLAN 2030:

- HA1.11.6 Consider historic preservation in the development and enforcement of City regulations.
- CD1.1.4 Identify and emphasize distinguishing natural features that strengthen Santa Cruz’s visual image (i.e., open space, Monterey Bay).
- CD1.4.2 Consider visual access to nearby natural areas as part of developmental review.

- CD1.5.1 Enhance the prominence of the San Lorenzo River as a natural feature that provides structure, orientation, and recreational enjoyment by including it in surrounding area and management plans.
- CD1.5.2 Provide incentives for new development adjacent to the San Lorenzo River that includes patios overlooking the river, enhanced connections to the levee trails, and other design features that connect the built environment to the river.
- CD3.1.1 Strengthen the linkage between Downtown, the Beach Area, and San Lorenzo River through amendments to corresponding Area Plans and the Zoning Ordinance.
- CD3.1.2 Maintain, update, and implement the City's San Lorenzo Urban River Plan.
- CD3.3.1 Develop incentives to encourage the assembly of small parcels through Area Plan amendments and Zoning Ordinance changes.
- CD3.3.2 Revise the Zoning Ordinance to limit development possibilities for small parcels.
- CD4.1.3 Identify and establish design concepts that make visitor-serving corridors attractive and interesting through landscaping, banners, flags, art, and displays.
- CD4.2.3 Underground utilities when major road improvement or reconstruction is proposed, if possible.
- CD4.3.3 Protect existing significant vegetation and landscaping that provides scenic value along with wildlife habitat and forage.
- CD4.3.4 Maintain an ordinance requiring replacement and maintenance when heritage tree removal is necessary for new development.
- CD4.3.6 Implement streetscape and other landscaping plans in the City's Area and Specific Plans.
- CD5.2.1 Encourage buildings to be oriented towards sidewalks, public plazas, walkways, or rivers and to include features such as public benches and natural seating areas.
- CD5.2.2 Encourage the incorporation of public benches and natural seating areas along public walkways and in public plazas and parks.
- CD5.2.4 Ensure that new and revised design guidelines encourage the use of pedestrian-scaled fenestration, awnings, entrances, landscaping, and other amenities.
- LU 1.1.2 Create incentives for the consolidation of underdeveloped parcels relative to development potential.
- LU1.2.1 Environmental review for specific projects shall be accompanied by sufficient technical data and reviewed by appropriate departments.
- LU2.3.1 Protect, maintain, and enhance publicly accessible coastal and open space areas.
- LU3.1.1 Encourage through incentives and expedited permit processing a variety of housing types, when appropriate.
- LU3.3.1 Amend the Zoning Ordinance to discourage strip commercial development in favor of clustered commercial and mixed-use development along transit corridors.
- LU3.7.1 Allow and encourage development that meets the high end of the General Plan Land Use designation density unless constraints associated with site characteristics and zoning development standards require a lower density.

- LU3.11.2 Ensure appropriate land uses and development standards that do not adversely impact adjacent open spaces.
- LU4.1.1 Support compact mixed-use development Downtown, along primary transportation corridors, and in employment centers.
- M1.1.1 Create walkable, transit-oriented activity centers throughout the city.
- M1.1.2 Connect activity centers with pedestrian and bicycle paths.
- M1.1.3 Implement pedestrian and bicycle improvements that support transit ridership.
- M1.4.2 Allow for future multi-modal use of future rights-of-way by protecting them from development.
- M2.1.2 Encourage use of alternative modes of transportation.
- M2.3.1 Design for and accommodate multiple transportation modes.
- M3.1.1 Seek ways to reduce vehicle trip demand and reduce the number of peak hour vehicle trips.
- M4.1.6 Enhance the pedestrian orientation of the Downtown Central Business District.
- M4.1.7 Require the site and building design facilitate pedestrian activity.
- M4.1.9 Require landscaping in the development, replacement, and repair of sidewalks, including the placement of trees on private property and/or in tree wells on sidewalks.
- ED1.1.6 Revitalize the RiverFront area.
- ED1.7.2 Diversify the range of visitor attractions in Santa Cruz, particularly those that draw on the city's unique natural and cultural assets.
- ED5.1.1 Provide for the development of supporting land uses adjacent to retail shopping areas, while assuring protection of existing residential neighborhoods.
- ED5.3.1 Provide for attractive commercial development (including more intensive and higher quality ground floor retail) along commercial corridors provided the uses are compatible with or transition easily to adjacent residential areas.
- ED5.5.1 Enhance Downtown as a welcoming and inviting destination for residents, visitors, and businesses.
- ED5.5.4 Create a distinctive and active pedestrian environment downtown
- ED5.5.5 Allow for the extension of café and retail uses within the public right-of-way, subject to design standards and management guidelines.
- HZ6.4.8 Minimize the alteration of natural floodplains, stream channels, and natural protective barriers that accommodate or channel floodwaters.
- PR1.1.3 Evaluate all lands, regardless of size, for their potential development as small parks, community gardens, or landscape lots.
- PR1.6.1 Maintain and enhance access for vehicles, transit, bicycles, and pedestrians.
- PR2.2.2 Encourage private sponsorship of special events and programs, historic events, joint projects, and cultural exchanges that involve and benefit the community.
- PR3.1.1 Provide recreational and educational opportunities within the open space lands and coastline consistent with adopted master or management plans.
- PR4.1.3 Maintain and enhance the recreational value of the San Lorenzo River walkway and East and the West Cliff Drive pathways
- NRC1.1.2 Where consistent with riparian and wetland protection, provide actual or visual access of a low-impact nature

- NRC1.1.1 Require setbacks and implementation of standards and guidelines for development and improvements within the city and adjacent to creeks and wetlands as set forth in the Citywide Creeks and Wetlands Management Plan.
- NRC1.3.1 Conserve creek, riparian, and wetland resources in accordance with the adopted City-wide Creeks and Wetlands Management Plan and the San Lorenzo River Plan.
- NRC2.2.1 As part of the CEQA review process for development projects, evaluate and mitigate potential impacts to sensitive habitat (including special-status species) for sites located within or adjacent to these areas.

DOWNTOWN PLAN FIRST PRINCIPALS

- Form and Character. New buildings should be allowed to develop individual character while retaining qualities of the historic townscape. Issues of articulation, materials, signage, setbacks, scale, massing, form, bulk, solar access and height are critical.
- Building Height. Buildings should maintain the scale and character of the existing downtown, with explicit criteria for additional height up to seven stories and provisions to ensure that buildings do not shade key public open spaces. Since this First Principle was established in 1991, the downtown development pattern has largely respected the existing two to three story development pattern with several taller buildings spaced throughout the Pacific Avenue Retail District, providing architectural variation. The 2017 update recognizes these taller buildings also contribute greatly to the architectural fabric of the City and can provide significant opportunities to plan for environmentally sound infill development without damaging the character of the City. The 2017 modifications to the Additional Height Zones have been carefully written to recognize the City's successful recovery from the 1989 Loma Prieta earthquake; preserving and enhancing the urban form of the City, without sacrificing the special human scale and character of downtown. New development will not be required to strictly adhere to a 2 and 3 story scale.
- Housing. Significant new housing opportunities should be targeted throughout the downtown, including Pacific Avenue, the San Lorenzo riverfront, and South of Laurel. Housing should be comprised of a mix of apartments and condominiums. SRO housing should be replaced and dispersed throughout the downtown area.
- Accessibility. A downtown that aesthetically integrates access as a primary design criterion for all improvements to ensure increased opportunities for the public to participate in commercial, governmental, residential, social and cultural activities.
- Open Space and Streetscape. A strong network of public and private open spaces (streets, sidewalks, public parks, plazas, passageways and courtyards) that creates a socially active and pedestrian-oriented downtown core should be emphasized.
- Circulation. Downtown should be predominantly pedestrian in nature; movement should be carefully structured to reinforce the character of the place. Pedestrian, bicycle, and transit access to the downtown should be enhanced.
- Parking. Parking in the downtown core should continue to be provided by the Parking District in a centralized fashion, to maximize shared use and minimize the quantity of stored vehicles.

SAN LORENZO URBAN RIVER PLAN (SLURP)

- Improve the scenic and recreational value of the Riverfront
- Improve public access and pedestrian/bicycle movement to and along the River
- Improve the urban and neighborhood interface with the San Lorenzo River, Branciforte Creek, and Jessie Street Marsh
- Incorporate the San Lorenzo River, Branciforte Creek, and Jessie Street Marsh into the surrounding urban fabric of downtown and neighborhoods.
- (Front Street – Significant Riverfront Areas (SRFA))
- SRFA-1: Require new development projects to incorporate design features that encourage active engagement with the Riverwalk such as; filling adjacent to the Riverwalk and landscaping, providing direct physical access to the Riverwalk, including appropriate active commercial and/or residential uses adjacent to the Riverwalk or providing a combination of these and/or other design features that support the resource enhancement and river engagement policies of the San Lorenzo River Plan.
- SRFA-2: Require new development projects to incorporate pedestrian and/or bicycle connections between Front Street and the Riverwalk at appropriate locations such as the extensions from Maple Street and near Elm Street.
- SRFA-3: Maintain the ten-foot setback area between residential and commercial uses adjacent to the levee trail from the western edge of the trail. The area between the property line and the Riverwalk shall be filled to raise the adjacent ground-level use to a similar or higher elevation as the Riverwalk. The public lands between the Riverwalk and the private property may incorporate publicly accessible commercial or residential amenities, such as outdoor public seating. Trees planted as part of the San Lorenzo Flood Control Improvement Project should be maintained and incorporated into new development where feasible and where not in conflict with the required fill or publicly accessible amenities.

The project will result in 175 residential condominiums, ground floor and levee-facing commercial space, an expansion of the open space area adjacent to the Riverwalk, and two pedestrian passageways between Front Street and the Riverwalk. As listed above, the project implements several long-standing goals of the city to enhance the Riverwalk and the river as a natural amenity for scenic, recreational, and educational purposes and provides a variety of housing units downtown to support the existing commercial core and Transit Priority Area where a variety of alternative transportation methods are available.

The project includes minor variations from the physical design and development policies of the Downtown Plan that do not affect the project's consistency with the above policies and goals.

The project site is located within the Coastal Zone and within the Downtown Plan area, which is a developed urban area that was recognized in the Downtown Plan as an area that is desirable for further intensification. An Archaeological Report was submitted which indicates that there is a low potential for archaeological resources on the property; however, standard conditions of approval are included that require reporting to occur if resources are discovered during construction. The site does not contain sensitive habitat and the project

will not disturb area east of the Riverwalk where sensitive habitat may be located. The project would have no effect on wildlife movement. The trees on and adjacent to the project site could provide potential nesting habitat for migratory birds which are protected by the Migratory Bird Treaty Act (MBTA) and the proposal is to remove 19 trees on the property that are located within the footprint of the development, within the area of the fill, and one street tree. Conditions of approval require compliance with General Plan Action NRC2.2.1 and associated Table 1, which requires pre-construction nesting bird surveys with establishment of appropriate construction buffers if needed, if tree removal and/or construction were to commence during the nesting season.

The project will enhance public access to the coast by improving the Riverwalk in the location of the project site with and expanded open space area, landscaping, river-facing commercial spaces and residential amenities, and residential units facing the Riverwalk.

6. **The exterior design and appearance of buildings and structures and the design of the site plan shall be compatible with design and appearance of other existing buildings and structures in neighborhoods which have established architectural character worthy of preservation.**

The exterior design of the building is contemporary and includes varying designs and pedestrian passageways between the buildings to reflect a grouping a buildings rather than one monolithic structure. All three buildings include projections and recesses to create depth and shadows for variation in the building walls and minimal ornamental features to create a clean and streamlined style. Elements of the historic buildings at 418 and 428 Front Street have been incorporated into the ground floor façade of the building to provide visual representation of the demolished structures as reference for the required interpretative displays. The design is similar to recently constructed and approved buildings in the vicinity and will modernize the Front Street streetscape. The design and exterior materials meet the goals of the Downtown Plan to allow for individuality in design while preserving the humanistic scale and warmth of the existing downtown.

7. **Design of the site plan shall respect design principles in terms of maintaining a balance of scale, form and proportion, using design components, which are harmonious, materials and colors that blend with elements of the site plan and surrounding areas. Location of structures should take into account maintenance of view; rooftop mechanical equipment shall be incorporated into roof design or screened from adjacent properties. Utility installations such as trash enclosures, storage units, traffic-control devices, transformer vaults and electrical meters shall be accessible and screened.**

The project is located within Additional Height Zone B in the Downtown Plan and is permitted to a maximum height of 70 feet, subject to specific design and development criteria. The criteria are intended to guide building design to reflect the human scale and pedestrian quality of the downtown and to avoid the creation of monolithic buildings. The project consists of three buildings that are separated by two pedestrian passageways and

that are connected by a basement and ground-level parking garage. The design includes variations in roofline, design, and size between buildings to achieve the look of a grouping of buildings, rather than a single, monolithic building. The form of the building is a standard shape, however, the design includes stepbacks, recesses, balconies, open spaces, and pedestrian passageways that minimize the height and mass of the building. As conditioned, the design of the site plan and building design is consistent with the design and development criteria for additional height provided in the Downtown Plan that is intended to address building scale, form, and proportion. The Downtown Plan provides standards for rooftop equipment, stair towers, and elevator housing that are required as a part of the project and the trash enclosure will be designed to meet the standards of the Public Works Department and to blend in with the exterior design of the building. All new utility connections to the development will be placed underground.

8. **Where a site plan abuts, or is in close proximity to, uses other than that proposed, the plan shall take into account its effect on other land uses. Where a nonresidential use abuts or is in close proximity to a residential use, the effect of the site plan should maintain the residential quality of adjacent or nearby areas.**

   The project is a mixed-use building with ground-floor and levee-facing commercial and upper-floor apartments. The project site is located within the downtown area where a variety of uses exist in the surrounding vicinity including commercial uses and residences. Intensification of nearby uses is expected as a part of the Downtown Plan in a manner and scale that is comparable to the proposed project.

9. **The orientation and location of buildings, structures, open spaces and other features of the site plan shall be such as to maintain natural resources including significant trees and shrubs to the extent feasible, maintain a compatible relationship to and preserve solar access of adjacent properties, and minimize alteration of natural land forms, building profiles, location, and orientation must relate to natural land forms.**

   There are no natural landforms on the property. The levee is a man-made structure and the adjacent San Lorenzo River is not be impacted by the development in that all disturbance remains west of the Riverwalk and not within the river channel. An Arborist Report was prepared for the project by Kurt Fouts, Arborist Consultant, dated September 9, 2018 which indicates that there are four heritage trees that will be removed as a part of the project. Three of the trees are located along the outside of the levee where new fill will be placed to allow for an expansion of the Riverwalk area and one of the heritage trees is located within the footprint of the development which is encouraged to be constructed to the property line. There is also one, non-heritage street tree (12” red oak) that is recommended for removal due to poor health. The project includes the addition of 21 trees at the expanded Riverwalk area and two new street trees at the Front Street frontage to mitigate the proposed tree removal. A shading diagram was included in the Downtown Plan EIR for a project in the proposed location and of similar mass, height, and orientation. The shading diagram notes that some shading will occur on the river during the afternoon in the winter months and additional review by Biologist Gary Kittleson confirms that the shading will not affect the

health of the river or surrounding riparian habitat. The project will not result in excessive shading along Front Street. The project site is located within an area that allows for building heights up to 70 feet under specific conditions; therefore, future infill development on adjacent parcels is anticipated in this location.

10. The site plan shall be situated and designed to protect views along the ocean and of scenic coastal areas. Where appropriate and feasible, the site plan shall restore and enhance visual quality of visually degraded areas.

The project site is located within the downtown area and will be visible from the San Lorenzo River but will not likely be visible from the coast or from the trestle bridge at the mouth of the river. The Local Coastal Program indicates that the San Lorenzo River is considered to be a significant coastal viewshed and the project will be located on the outside of the levee and will not affect the views of the river from the Laurel Street or Soquel Ave bridges or from the Riverwalk. The Downtown Plan identifies the east side of Front Street between Laurel Street and Soquel Avenue as an area that is intended to be developed with structures up to 70 feet in height to restore the river as an open space amenity by intensifying commercial and residential uses along the levee and by providing connections to the river from the downtown core. The project will provide ground-level and levee-facing commercial uses that draw pedestrians from Pacific Avenue to Front Street and the Riverwalk, and it will provide upper floor residences that benefit from view of the river. Additionally, the project will contribute to the revitalization of Front Street to support the downtown core and encourage connections between downtown and the Riverwalk and the beach.

11. The site plan shall minimize the effect of traffic conditions on abutting streets through careful layout of the site with respect to location, dimensions of vehicular and pedestrian entrances, exit drives and walkways; through the adequate provision of off-street parking and loading facilities; through an adequate circulation pattern within the boundaries of the development; and through the surfacing and lighting of off-street parking facilities.

The Downtown Plan was amended in 2017 to allow for an expansion of the Additional Height Zones, which was intended to allow for increased density in the downtown area. A Trip Generation Analysis was prepared for the Downtown Plan EIR, which estimated the construction of 321 apartments on the block east of Front Street, which is the location of the subject project site. The estimates at that time indicated that future development on the block would likely result in 1,864 net daily trips. This estimate was calculated based on probable use with a 40-percent reduction to account for internal capture, pass-by trips, walkability, bikeability, and the Metro Transit Center *(Downtown Plan Amendment, July 2017)*.

A Trip Generation Analysis (*Kimley-Horn*, dated July 2019) was prepared for the proposed project using The Institute of Transportation Engineers (ITE) *Trip Generation Manual, 10th Edition (2017)*. The project is estimated to generate a net of 854 daily trips, which

includes trip credits for existing uses and a 40% reduction described above. This estimate is consistent with the Downtown Plan EIR in that it is less than the estimated increase of 1,864 net daily trips and represents only a portion of the entire block.

There are public improvements that are required as a part of the project to achieve the goals of the Downtown Plan, to meet the requirements in the Municipal Code, and to mitigate the impacts of the project per the Downtown Plan Amendments EIR. The project shall provide sidewalks, street trees, and light standards along the parcel frontage. The project will also require access improvements to and from the site and improvements to the public right of ways including but not limited to, a 'right turn in/right turn out only' restriction at the garage entrance, a double gate system with a roll down gate located at the entrance and arms located at least 75 feet into the garage, card readers, and rapid gate system. The applicant will be required to participate, on a fair share basis, in intersection improvement projects at Front/Soquel, Front/Laurel and Pacific/Laurel and the applicant will be required to pay the full cost of signal revision at the Front/Metro/ project driveway intersection and will be required to complete such improvements as a part of the project. Additionally, the applicant will be required to participate on a fair share basis in the construction of a two way left-turn lane on Front Street.

Additional public improvement requirements include the improvement of the Riverwalk from Soquel Ave through the project site and would include a new substantial asphalt concrete pathway section, widening of the Riverwalk pathway to 12 feet, and a PCC parking pad for the service truck that will maintain the on-site private storm water system and improved green bike lane striping across the two driveways.

The project will also be required to provide a Transportation Demand Management Program (TDM) to achieve reduced vehicle miles travelled consistent with Climate Action Plan and General Plan goals and objectives, including but not limited to:

- Provide at least one parking space for, and subsidizing if necessary, a car share program (i.e. zip car) in the publically accessible portion of the parking facility. If unable to secure a partnership with a car share program, this space shall be marked for carpool vehicles.
- Provide information to all residents to enroll in the Cruz511 commute management platform and provide city-provided alternative commute information to all residents. Require all non-residential uses to enroll in Cruz511/GO Santa Cruz TDM program. And provide GO Santa Cruz brochures to all new employees.
- Enter in to a contract agreement with METRO to provide reimbursable transit passes to all residents.

In additional to the above improvements, programs, and fees, the applicant will be required to pay Traffic Impact Fees (TIF) unless phased or deferred payment terms are approved by the Planning and Public Works' Directors. The Traffic Impact Fee is calculated by the Public Works Department prior to building permit issuance and is currently estimated at $254,000.

12. **The site plan shall encourage alternatives to travel by automobile where appropriate, through the provision of facilities for pedestrians and bicyclists, including covered parking for bicycles and motorcycles where appropriate. Public transit stops and facilities shall be accommodated as appropriate, and other incentive provisions considered which encourage non-auto travel.**

    The project is located in the downtown area and is within walking and biking distance to a variety of retail stores, personal services, and recreational areas. The metro center and bike rental facilities are also within close proximity and the building will provide bike parking facilities as required by the City Zoning Ordinance. Finding No. 11 above articulates the various Transportation Demand Management strategies that are incorporated as conditions of approval.

13. **The site shall provide open space and landscaping which complement buildings and structures. Open space should be useful to residents, employees, or other visitors to the site. Landscaping shall be used to separate and/or screen service and storage areas, separate and/or screen parking areas from other areas, break up expanses of paved area, and define open space for usability and privacy.**

    The project includes the development of a significant amount of open space both for residents and the public in the form of an expanded Riverwalk area which will be landscaped and will connect with river-facing commercial spaces. The project includes private balconies, as well as a roof deck and it provides significant landscaping at the street frontages. Parking will be located within the building in a basement and ground level parking garage.

14. **The site plan shall reasonably protect against external and internal noise, vibration and other factors, which may tend to make the environment less desirable. The site plan should respect the need for privacy of adjacent residents**.

    The proposed development requires the issuance of a building permit. All units are required to meet all applicable regulations of the California Building Code pertaining to noise, vibration, and other factors affecting indoor and exterior environmental quality. The final building design is conditioned to comply with all recommendations of the project Noise Assessment (prepared by *Charles M. Salter Associates*, Inc., dated November 7, 2018) in order to meet the noise standards of the General Plan which requires 45 decibels or less for interior noise levels and 60 decibels or less in outdoor activity areas. The Noise Assessment recommends the use of higher Sound Transmission Class (STC) rated windows at the frontages of Front Street and for the front portions of the pedestrian passageways.

15. Signs shall complement the site plan and avoid dominating the site and/or existing buildings on the site or overwhelming the buildings or structures to which they are attached. Multiple signs on a given site should be of a consistent theme.

There are no signs proposed as a part of the project. Any future signage requires approval of a Sign Permit prior to installation.

16. Building and structures shall be so designed and oriented to make use of natural elements such as solar radiation, wind, and landscaping for heating, cooling and ventilation.

The proposed buildings have been designed to make use of solar radiation and wind for natural heating and cooling by providing operable windows on all elevations, a rooftop deck, and wide pedestrian passageways.

17. The site plan shall incorporate water-conservation features where possible, including in the design of types of landscaping and in the design of water-using fixtures. In addition, water restricting showerheads and faucets shall be used, as well as water-saving toilets utilizing less than three gallons per flush.

The proposed new units and on-site improvements, including new landscaping and irrigation, requires the issuance of a building permit which shall be reviewed for water conservation by the City Water Conservation Office.

18. In all projects in Industrial (I) Zones, building design shall include measures for reusing heat generated by machinery, computers and artificial lighting.

The site is not located within the (I) zone district; therefore, this finding is not applicable.

19. In all projects in Industrial (I) Zones, all buildings and structures shall be so designed and oriented to make use of natural lighting wherever possible.

The site is not located within the (I) zone district; therefore, this finding is not applicable.

20. Heating systems for hot tubs and swimming pools shall be solar when possible but in all cases energy efficient.

There are no hot tubs or pools proposed; therefore this finding is not applicable.

21. Enhance the West Cliff Drive streetscape with appropriate building mass, modulation, articulation, coloring and landscaping that is compatible with and would not diminish the visual prominence of the public open space.

The site is not located on West Cliff Drive; therefore, this finding is not applicable.

With respect to the Administrative and Special Use Permits, Section 24.08.050 to allow for greater than 60 residential units in the Downtown Area (SUP), an office use along Front Street (leasing office) (AUP), a combined public private fitness studios and dance school on Front Street (AUP), and an instructional school (418 Project)along Front Street (AUP)

22. The proposed structure or use conforms to the requirements and the intent of this title, and of the General Plan, relevant area plans, and the Coastal Land Use Plan, where appropriate;

The project site is located within the Front Street/Riverfront Corridor, which is a subdistrict of the Downtown Plan area. The Downtown Plan describes the Front Street/Riverfront Corridor as an area in need of redevelopment into a transitional area between the intensive commercial core along Pacific Avenue and the recreational resources provided by the San Lorenzo River. The plan encourages active ground-level uses such as retail and restaurants adjacent to Front Street, and upper floor residences and offices that take advantage of river viewsheds. The project does not result in environmental impacts and locates residential units in a transit priority area where there are many options for alternative transportation. Therefore the mixed-use building with greater than 60 residential units is consistent with the goals and policies of the General Plan, Downtown Plan, and Local Coastal Plan.

Table 4-1 in the Downtown Plan identifies permitted ground level uses in the Front Street/Riverfront Corridor and Table 4-1 in the Downtown Plan identified permitted uses along the Riverwalk. There are some anticipated uses proposed as a part of the project that require the approval of Use Permits:

- The project includes a leasing office as ground floor uses along Front Street. The use is consistent with the criteria established in the Downtown Plan in that the use is not located along Pacific Avenue or within 75 feet perpendicular to Pacific Avenue; the use is compatible with planned ground level commercial uses and upper level residential uses in that the leasing office directly serves the development, and the building meets the requirements in the Downtown Plan for storefront and building façade guidelines and is capable of being transformed to retail space in the future.
- The applicant indicates that they are in discussion with the owners of the 418 Project to relocate the business to the largest commercial space facing Front Street (Commercial Space C). The agreement has not been finalized; however, this permit includes a request for an Administrative Use Permit to allow for the dance performance center to be located along Front Street in the event that the business is relocated. The space is located on Front Street and is therefore not subject to the criteria in the Downtown Plan for instructional schools along Pacific Avenue or east-west street frontages. The instructional school is an appropriate use along Front Street in that the activity within provides interest and enjoyment to pedestrians and preserves a local business that is an established part of the community.
- The project includes a co-working space at the Riverwalk that is provided as an amenity space for residents and is intended to be made available to members of the public. This use is Principally Permitted in the Downtown Plan and is consistent with

the criteria that the use will be compatible with ground and upper level planned uses in that the office space serves residents and members of the public.

- The project includes a combined public/private fitness studio at the Riverwalk level that is intended to be provided as an amenity to residents and available to the public to rent for private fitness classes. The use is consistent with the criteria for Health/Fitness Studios in the Downtown Plan in that the private/public use is consistent upper level residential uses.

The remaining, undefined commercial spaces are required to be designed and constructed to allow for food and drink service uses in addition to retail, and the applicant indicates that the commercial spaces are intended to be filled by businesses that are open to the public, that can take advantage of connected outdoor areas, and that have an active and engaging presence on the street and sidewalk. These types of uses and outdoor areas are highly encouraged for areas within the Downtown Plan and along the Riverwalk and are consistent with the several goals and policies in the Downtown Plan for the development of the Front Street/Riverfront Corridor, including the Planning Principals and Strategies. Pursuant to Table 4-2 of the Downtown Plan, a business is required to obtain approval of an Administrative Use Permit prior to the establishment of a retail use along the Riverfront to ensure that the use is consistent with the goal to activate the Riverwalk and to determine if the use will be compatible with surrounding residential and commercial uses.

23. That any additional conditions stipulated as necessary in the public interest have been imposed;

Conditions of approval are stipulated that require the plans submitted for building permit issuance to include all public and private improvements, all landscaping details, and all details regarding exterior materials and colors as shown on the approved plans to ensure protection of the public interest in the project. Variations to lower-quality materials or design at the building permit phase will require prior approval of a Modification prior to issuance. The plans are conditioned to provide adequate lighting at the pedestrian passageways and along the expanded Riverwalk area to ensure security for pedestrians but that are also downward facing to reduce off-site glare. Additionally, surveillance cameras are required to be installed at the exterior of the building in accordance with Police Department requirements and the applicant is permitted to close open space areas during the nighttime hours to ensure the safety of the residents.

24. That such use or structure will not constitute a nuisance or be detrimental to the public welfare of the community; and

The mixed-use building does not constitute a nuisance or be detrimental to the public welfare of the community in that the project results in the redevelopment of Front Street which is currently disconnected from the downtown commercial core and less frequented by pedestrians, and the project results in an improvement to the Riverwalk . The addition of residential units and new commercial spaces in the project increases pedestrian traffic in the Front Street area and at the Riverwalk and provides new construction in an area in need of

redevelopment. Public improvements are included in the project to respond to traffic impacts.

25. That all thrift store uses shall include a management plan that identifies collection facilities for donated items, operating hours for donation facilities which discourage unsupervised dropoffs, adequate storage areas for sorting the materials, and provides a plan to properly dispose of unusable items in a timely, secure, and orderly fashion and maintains premises in a clean and attractive condition.

A thrift store is not proposed as a part of the project.

With respect to the Coastal Permit, Section 24.08.250 to allow for the construction of a 188,694 square-foot, mixed-use building in the appealable area of the Coastal Zone.

26. Maintain views between the sea and the first public roadway parallel to the sea;

The project site is located in the downtown area, on the east side of Front Street between Front Street and the San Lorenzo River. The project is not located between the sea and the first public roadway parallel to the sea.

27. Protect vegetation, natural habitats and natural resources consistent with the Local Coastal Land Use Plan;

An Arborist Report was prepared for the project by Kurt Fouts, Arborist Consultant, dated September 9, 2018 which indicates that there are four heritage trees that will be removed as a part of the project. Three of the trees are located along the outside of the levee where new fill will be placed to allow for an expansion of the Riverwalk area and one of the heritage trees is located within the footprint of the development which is encourage to be constructed to the property line. There is also one, non-heritage street tree (12" red oak) that is recommended for removal due to poor health. The project includes the addition of 21 trees at the expanded Riverwalk area and two new street trees at the Front Street frontage to mitigate the proposed tree removal. A shading diagram was included in the Downtown Plan EIR for a project in the proposed location and of similar mass, height, and orientation. The shading diagram was notes that some shading will occur on the river during the afternoon in the winter months and additional review by Biologist Gary Kittleson confirms that the shading will not affect the health of the river or surrounding riparian habitat. The project will not result in excessive shading along Front Street. The project site is located within an area that allows for building heights up to 70 feet under specific conditions; therefore, future infill development on adjacent parcels is anticipated in this location.

28. Be consistent with any applicable design plans and/or area plans incorporated into the Local Coastal Land Use Plan;

The project site is located in the Downtown Plan area within Additional Height Zone B which includes design and development standards for new buildings that are taller than the

base height of 55 feet. As conditioned, the project is consistent with these standards with the exception of minor variations and waivers that do not affect the ability for the project to meet the Downtown Plan goals or community objectives.

29. Maintain public access to the coast along any coastline as set forth in the Local Coastal Land Use Plan;

Public access to the coast is positively impacted by the project in that the project site is located between Front Street and the Riverwalk which both provide direct walking, biking, or vehicular access to the coast.

30. Be consistent with the Local Coastal Land Use Plan goal of providing visitor-serving needs as appropriate;

The project includes 175 residential units and ground-floor commercial space on the Front Street frontage and the Riverwalk frontage. Future uses within those commercial spaces will be those that are permitted in the Downtown Plan for the ground-floor including retail sales, eating and drinking establishments, general markets, and commercial entertainment, which all function as visitor-serving amenities.

31. Be consistent with the Local Coastal Land Use Plan goal of encouraging coastal development uses as appropriate.

The project is consistent with the goal of encouraging coastal development uses as appropriate, in that the location of the project facilitates future pedestrian and resident access to the Riverwalk, which provides access to the coast, and the Pacific Avenue downtown core and strengthens the connection between downtown and the beach, which is within walking and biking distance from the project site.

<u>With respect to the Revocable License Findings, Section 24.10.2340(6)(c)</u>

32. The extension area in the particular location on the sidewalk will not adversely affect the use of the public street, will implement the Downtown Recovery Plan, and the General Plan.

The project includes fill between the outer edge of the levee and the building to expand the Riverwalk area west of the existing path. There are commercial spaces, residential amenity spaces, and residential units facing the Riverwalk and the area is conditioned to be maintained as accessible to the public. The permit is conditioned to require the owner to obtain a modified Revocable License Agreement for the use, maintenance, and management of the of the expanded fill areas. The extension area includes landscaping, seating opportunities, and access to the residential units and commercial spaces that bridge the gap between the public and private realm, as encouraged by the Downtown Plan at the Riverwalk. The extension area does not adversely affect the use of the public street in that it

is not located adjacent to a public street and is consistent with the goals in the Downtown Plan.

33. The proposed use will not be detrimental to persons residing, visiting, or working in the area.

The extension area at the Riverwalk is not detrimental to the general public in that conditions of approval are included that allow for closure of the pedestrian passageways between dusk and dawn and that require maintenance of the extension area in clean and safe condition, removal of moveable furniture at the close of business, and adequate clearance for the traveled way.

34. The proposed use will conform to all relevant regulations in the Municipal Code, and applicable county regulations and state law.

The use of the extension area conforms to all relevant regulations in the Municipal Code and the Downtown Plan and applicable County regulations and State Law in that the property owner and/or future tenants are required to obtain approval of all pertinent City, County and State agencies prior to construction and use, including but not limited to accessibility requirements, outdoor food service and alcohol service, and outdoor programmed events.

With respect to the Heritage Tree Removal Findings, Resolution NS-23,710 for the removal of four heritage trees

35. A construction project design cannot be altered to accommodate existing heritage trees or heritage shrubs.

An Arborist Report was prepared for the project by Kurt Fouts, Arborist Consultant, dated September 9, 2018 which indicates that there are four heritage trees that will be removed as a part of the project. Three of the heritage trees are located along the outside of the levee where new fill will be placed to allow for an expansion of the Riverwalk area and one of the heritage trees is located within the footprint of the development. The Downtown Plan requires a building in this location to provide the pedestrian passageways at the proposed widths, encourages the buildings to be constructed to the property lines, and requires the placement of fill between the building and the levee to expand the Riverwalk. The project meets these requirements and as a result, the developable area of the project site is significantly constrained and there is no opportunity to modify the design the preserve the heritage trees. The project includes the addition of 21 trees at the expanded Riverwalk area and two new street trees at the Front Street frontage to mitigate tree removal.

With Respect to the Tentative Subdivision Map, Section 23.26.050 to allow for the creation of commercial and residential condominiums.

36. The proposed tentative map is consistent with the applicable general and specific plans.

The project site is designated as RVC/Downtown Santa Cruz (Regional Visitor Commercial) in the General Plan and is located within the CBD (Central Business District) zone district and within the Coastal Zone. The project site is also located within the Front Street/Riverfront Corridor subarea of the Downtown Plan. The Downtown Santa Cruz/RVC General Plan designation is intended to emphasize a mix of uses such as office and retail uses, residential and mixed-use developments, restaurants, and visitor attractions. The CBD zone district is a zone that is intended to implement the objectives of the Downtown Plan. There is no density range in the CBD or RVC districts however, the project complies with the Floor Area Ratio limitations and the development standards provided in the RVC district and the Downtown Plan with the exception of some standards that are requested as Design Variations and as Density Bonus incentives/concessions and waivers. The project is supported by the goals and policies in the General Plan 2030, the Downtown Plan, the Local Coastal Program, and the San Lorenzo Urban Plan that are listed in finding #5 above.

37. The design or improvements of the proposed subdivision are consistent with applicable general and specific plans.

The recordation of a condominium map is consistent with Title 23 of the Municipal Code in that conditions of approval are included that require: the recordation of Covenants, Conditions, and Restrictions (CC&R's), the common area at the Riverwalk is required to mapped as a Public Utility Easement, and the development includes public improvements such as the installation of street light standards and street trees along the parcel frontage, improvement of the Riverwalk path, and participation on a fair share basis in intersection improvement projects at Front/Soquel, Front/Laurel and Pacific/Laurel and the applicant is required to pay the full cost of signal revision at the Front/Metro/project driveway intersection and is required to complete such improvements as a part of the project. Additionally, the applicant is required to participate on a fair share basis in the construction of a two way left-turn lane on Front Street and is required to pay Traffic Improvement Fees (TIF).

38. The site is physically suitable for the type of development proposed.

A geotechnical report, drainage, grading and erosion control plans have been reviewed and approved by Public Works Department, Building Department, and Water Department for the proposed development. Public water and sewer are available to the serve the site. The project Conditions of Approval assure that the site is physically suitable for the type of development proposed.

39. The site is physically suitable for the proposed density of development.

The site is physically suited for the creation of 175 residential condominiums in that the project is consistent with the maximum Floor Area Ratio provided in the General Plan for

the RVC district and, with the exception of the levee which will be filled to create a level area between the building and the Riverwalk, the site is primary flat and is currently developed with commercial buildings and parking lots. The project includes all of the required on-site parking to serve the residential units and commercial spaces and the project is located downtown and is within walking and biking distance of commercial goods and services, recreational areas, and public transportation. The building does not block views of the river from downtown in that there are no views that currently exist given the height of the levee, and the building does not block views of the river from the Riverwalk or other identified scenic vistas.

40. The design of the subdivision or proposed improvements is not likely to cause substantial environmental damage or substantially and avoidably injure fish or wildlife or their habitat.

The design and improvements of the subdivision for the purposes of creating condominiums do not result in substantial environmental damage or injure fish or wildlife in that there are no mapped or known biotic resources on the project site including on the outside edge of the levee, and the project site is currently developed with commercial buildings and parking lots. Conditions of approval are included that require compliance with the city's bird safety standards and that require downward-facing landscape lighting only that results in no off-site glare to the river.

41. The design of the subdivision or the type of improvements is not likely to cause serious public health problems.

The improvements and design of the development are in accordance with the State Subdivision Map Act and City's Subdivision Ordinance and the associated improvements do not cause or result in serious public health problems. Public water and sewer are available to serve the site.

42. The design of the subdivision or the type of improvements will not conflict with easements acquired by the public at large for access through, or the use of, property within the subdivision.

The design of the subdivision does not conflict with public easements acquired by the public at large for access through or the use of the property in that no such easements are known to exist on the project site. The development includes two publically-accessible pedestrian passageways through the development and includes the expansion of the area adjacent to the publically-accessible Riverwalk to allow for public access through and around the site.

<u>With respect to the Density Bonus and Waiver, Section 24.16.270</u>

43. The housing development is eligible for a density bonus and any concessions, incentives, waivers, modifications, or modified parking standards requested;

conforms to all standards for affordability included in this section; and includes a financing mechanism for all implementation and monitoring costs.

The proposed project meets the definition of a housing development as contained in Section 24.16.205(17) of the Zoning Ordinance. The project is eligible for a density bonus and associated density bonus waivers in that eleven percent of the 133 residential units established in the base density project (15 units) will be made available to households at the very low income level (50% Area Median Income) based on affordable rents or affordable ownership costs. Per section 24.16.225 of the Zoning Ordinance, the project qualifies for two Density Bonus incentives/concessions at these affordability levels and the applicant may request a Density Bonus waiver consistent with Section 24.16.255(4) of the Zoning Ordinance.

44. Any requested incentive or concession will result in identifiable and actual cost reductions to provide for affordable rents or affordable ownership costs based upon appropriate financial analysis and documentation if required by Section 24.16.255.

At the Elm Street passageway, the elevator shafts on either side of the passageway encroach 10 feet into the required 10 foot stepback above 35 feet, as required in the Downtown Plan for the Front Street/Riverfront Corridor. The total area of the 10 foot stepback above 35 feet along each side of the Elm Street passageway is approximately 860 square feet. Each elevator shaft is ten feet wide and represents about 8.5 percent of the each stepback area. Section 24.16.255(2) allows for an applicant to seek approval of specified incentives/concessions without any requirement that the applicant demonstrate to the city that the requested incentive or concession results in identifiable and actual cost reductions to the project to provide for affordable ownership costs. One of the incentives/concessions listed in this code section is a 20 percent reduction in setback area and the applicant has requested two such reductions for the encroachment of the elevator shafts on each side of the Elm Street pedestrian passageways. The project is eligible for such incentives/concessions pursuant to the City's Density Bonus Ordinance and state law requirements and no additional documentation is required.

45. If the density bonus, incentive, or concession is based all or in part on the inclusion of a child care center, the development conforms to the standards included in Section 24.16.235.

The density bonus and requested waivers are not based all or in part on the inclusion of a child care center.

46. If the density bonus incentive or concession is approved for a condominium conversion, the development conforms to the standards included in Section 24.16.240.

The project does not include a condominium conversion.

47. If the incentive or concession includes mixed-use buildings or developments, the nonresidential land uses will reduce the cost of the housing development and the proposed nonresidential uses are compatible with the housing development and with existing or planned development in the area where the proposed housing development will be located.

The project does not include incentives or concessions related to a mixed-use building or nonresidential uses of land.

48. If a waiver or modification is requested, the applicant has shown that the development standards for which the waiver or modification is requested will have the effect of physically precluding the construction of the housing development at the densities or with the incentives or concessions permitted by this Part 3.

Section 24.16.255(4) allows for applicants to seek approval of a density bonus waiver or modification of development standards that will have the effect of physically precluding the construction of a housing development eligible for a density bonus. The applicant is requesting the following waivers to development standards:

- Waiver of stepback requirements to reduce required 10-foot stepbacks above 50 feet on Front Street for 50 percent of the building frontage from 180 feet (50%) to 74 feet (20.5%) based on the combined building frontage.
- Waiver of stepback requirements to reduce required 10-foot stepback above 50 feet on the Riverfront frontage to between 0 and 10 feet.
- Waiver of building height standards in Additional Height Zone B to increase in maximum building height from 70 feet and 5 stories above ground floor commercial to approximately 77'9" total and 6 stories above ground floor commercial

The applicant has demonstrated that compliance with the required stepback above 50 feet and the maximum height for Additional Height Zone B would physically preclude development of the project at the requested density of 175 units. The applicant has developed the project to and beyond maximum allowed design standards and has, in the process, designed a project with smaller units overall than in the base project and with fewer units than would be allowable with a 35-percent bonus, which supports the inference that the project would be physically precluded without the requested waivers. In addition, the applicant has demonstrated, through detailed drawings, that a reasonable alternative floor plan complying with both the stepback and height requirements reduces the total unit count, as follows:

- In Building No. 1, the Project would lose a net of one studio apartment and three one-bedroom units;
- In Building No. 2, a one-bedroom unit would need to be converted to a studio apartment, with an additional loss of five one-bedroom units and one two-bedroom unit; and
- In Building No. 3, the Project would lose a net of three studio apartments and four one-bedroom units.

This evidence is sufficient to meet the applicant's burden to show that without the requested waivers, the applicant would be physically precluded from developing a 175 unit project; therefore, a waiver of the above listed requirements is appropriate.

49. If a commercial development bonus is requested, the project complies with the requirements of Section 24.16.258, the city has approved the partnered housing agreement, and the bonus has been mutually agreed upon by the city and the commercial developer.

A commercial development bonus is not requested as a part of the project.

50. If the housing development or the commercial development is in the coastal zone, any requested density bonus, incentive, concession, waiver, modification, modified parking standard, or commercial development bonus is consistent with all applicable requirements of the certified Santa Cruz local coastal program, with the exception of density.

The project is located in Exclusion Area B and is eligible for a density bonus in that 11 percent of the 133 units in the base density project will be made available to households at the Very Low Income level (50% AMI). The project includes requests for the incentives/concessions and waivers described in Findings #46 and #50 above and the project site is located within the Coastal Zone. The project is consistent with the goals and policies in the Local Coastal Program in that the project is located in the downtown transit priority area on a site that is currently developed with commercial buildings and parking lots and where the adjacent San Lorenzo River and surrounding riparian habitat is not impacted by the development. The development provides direct access to the Riverwalk that provide a pedestrian and bicycle connection from Highway 1 to the coast. Public water and sewer are available to serve the project site.

NOW, THEREFORE, BE IT RESOLVED by the City Council of the City of Santa Cruz, that Permit Application No. CP18-0153 requesting approval of the project is hereby approved subject to the Conditions of Approval attached hereto as Exhibit “A”.

PASSED AND ADOPTED this ___ day of ____, 2020, by the following vote:

AYES:

NOES:

ABSENT:

DISQUALIFIED:

APPROVED: _____
Mayor

ATTEST: _____
City Clerk

EXHIBIT "A"

CONDITIONS OF APPROVAL FOR THE PROJECT ON PROPERTY AT

418, 428, 440, 504, and 508 Front Street - CP18-0153

Coastal Permit, Non-Residential Demolition Authorization Permit, Design Permit, Tentative Map, Special Use Permit, Administrative Use Permit, Revocable License for Outdoor Extension Area, Heritage Tree Removal Permit, and Street Tree Removal to remove one street tree and three heritage trees, to combine five parcels, demolish three commercial buildings including two historic commercial buildings, and to construct a seven-story, mixed-use building with 175 residential condos and 11,498 square feet of ground floor and levee front commercial space on property located within the CBD/CZ-O/FP-O zone district and within the Front Street/Riverfront subarea of the Downtown Plan.

1. If one or more of the following conditions is not met with respect to all its terms, then this approval may be revoked.

2. All plans for future construction which are not covered by this review shall be submitted to the City Planning and Community Development Department for review and approval.

3. The project shall be consistent with applicable Mitigation Measures from the Downtown Plan EIR, including but not limited to those specifically included as conditions herein.

4. The Tentative Subdivision Map shall be exercised by filing a Final Map within thirty-six (36) months of the date of final approval, unless extended in accordance with the Subdivision Ordinance or state law, or it shall become null and void.

5. The final map of the subdivision shall be submitted showing compliance with all the provisions of Title 23 of the Santa Cruz Municipal Code, or with approved exceptions thereto.

6. If, upon exercise of this permit, this use is at any time determined by the Planning Commission to be incompatible with the surrounding neighborhood, revocation of, or amendment to, this permit by the Planning Commission could occur.

7. The use shall meet the standards and shall be developed within limits established by Chapter 24.14 of the Santa Cruz Municipal Code as to the emission of noise, odor, smoke, dust, vibration, wastes, fumes or any public nuisance arising or occurring incidental to its establishment or operation.

8. The applicant shall be responsible for the completeness and accuracy of all forms and supporting material submitted in connection with any application. Any errors or discrepancies found therein may result in the revocation of any approval or permits issued in connection therewith.

9. The development of the site shall be in substantial accordance with the approved plans submitted and on file in the Department of Planning and Community Development of the City of Santa Cruz. All aspects of construction must be completed prior to occupancy. Major

modifications to plans or exceptions to completion may be granted only by the City authority which approved the project.

10. All requirements of the Fire Department, Water Department, Building Department, and Public Works Department shall be met and shall be continuously maintained.

11. A demolition permit shall not be issued unless it is issued simultaneously with a building permit to construct the approved project in its entirety.

12. The applicant shall send notices of demolition to all tenants of the buildings to be demolished at least six months prior to demolition or eviction. The notices shall include contact information for the Economic Development Department for tenants to use as a resource for relocation assistance. Proof of noticing shall be submitted to the Economic Development Department.

13. New property descriptions shall be sequentially recorded with the County Recorder's Office and a copy of each recorded description provided to the City of Santa Cruz Planning Department and the Water Department.

14. The applicant and contractor who obtains a building permit for the project shall be required to sign the following statement at the bottom of these conditions, which will become conditions of the building permit:

    "I understand that the subject permit involves construction of a building (project) with an approved Design Permit. I intend to perform or supervise the performance of the work allowed by this permit in a manner which results in a finished building with the same level of detail, articulation, and dimensionality shown in the plans submitted for building permits. I hereby acknowledge that failure to construct the building as represented in the building permit plans, may result in delay of the inspections process and/or the mandatory reconstruction or alteration of any portion of the building that is not in substantial conformance with the approved plans, prior to continuation of inspections or the building final."

    _____

    Signature of Building Contractor Date

15. The property owner agrees as a condition and in consideration of the approval of this discretionary development permit that it will, pursuant to agreement and/or statutory provisions as applicable, including but not limited to Government code Section 66474.9, defend, indemnify and hold harmless the City of Santa Cruz or its agents, officers and employees from any claim, action or proceeding against the City or its agents, officers or employees to attack, set aside, void or annul this approval, which action is brought within the time period provided for under law, including but not limited to, Government Code Section 66499.37, as applicable. The property owner will reimburse the City for any court costs and attorney's fees, which the City may be required by a court to pay as a result of

such action. City may, at its sole discretion, participate in the defense of such action; but such participation shall not relieve applicant of his obligations under this condition. An agreement to this effect shall be recorded upon demand of the City Attorney or concurrent with the issuance of building permits, use of the property, filing of the final map, whichever occurs first and as applicable. The City shall promptly notify the property owner of any such claim, action or proceeding and the City shall cooperate fully in the defense thereof. If the City fails to promptly notify the property owner of any such claim, action or proceeding or fails to cooperate fully in the defense thereof, the property owner shall not thereafter be responsible to defend, indemnify or hold the City harmless.

PRIOR TO RECORDATION OF THE CONDOMINIUM MAP:

16. Prior to the approval of the final map, Covenants, Conditions and Restrictions (CC&Rs) containing the provisions set forth in Section 23.37.010 of the Subdivision Ordinance, shall be filed with the Planning Director. The CC&Rs shall include provisions for:
    - A requirement that any unit that is rented be managed by a single management company designated by the homeowners association to manage all rental units in the residential project
    - An operations plan for trash management.
    - Language shall be included that subsequent homeowner agreements shall not remove any conditions and/or restrictions specifically required by the City without first obtaining an amendment to this approval. The agreement shall be recorded and in full effect prior to issuance of any grading or building permits for the residences.

17. All necessary easements shall be acquired prior to City Council acceptance of the final subdivision map.

18. The specified common area shall be designated as a public utility easement.

19. Permanent monuments shall be furnished and installed by the subdivider as required by the Director of Public Works.

20. All plans and profiles of improvements shall be approved by the Director of Public Works prior to the filing of the final map, and the construction of said improvements shall be in accordance with the City specifications and shall be inspected by the Director of Public Works or his authorized agent.

21. The reproducible mylars of the plans and profiles for said improvements shall be furnished to the Public Works Department and shall become the property of the City of Santa Cruz at the time of approval.

22. Approval of the final plans and the conditions necessary for said approval are not necessarily limited to the approved tentative map conditions listed herein.

23. The development of the site shall be subject to the provisions of the Zoning Ordinance of the Santa Cruz Municipal Code.

24. Approval of final plans and any conditions necessary for implementation of same in no way modify the original conditions of approval.

25. No permits or work shall commence on the subject property until approval of the final map.

26. Installation and testing of the sewer lines, water systems, and fire hydrants must also be conducted to satisfy the requirements of the Public Works Department, the Water Department, and the Fire Department, prior to the issuance of the building permit.

PRIOR TO BUILDING PERMIT ISSUANCE:

27. Section 408 Army Corps of Engineers Permit: Prior to the issuance of a building or demolition permit for the site, the applicant shall submit evidence that a Section 408 Permit has been issued for the project by the Army Corps of Engineers (ACOE). The plans approved by the ACOE must be consistent with the plans submitted for building permit issuance and the applicant must demonstrate that the ACOE has approved the landscaping plans submitted with the building permit application.

28. All final working drawings shall be submitted to the Zoning Administrator for review and approval in conjunction with building permit application. The plans submitted for building permits shall have the same level of articulation, detailing, and dimensionality as shown in the approved plans. All approved exterior finishes and materials shall be clearly notated on the building permit plans.

29. Submit a final color and materials board for review and approval by Planning Staff. All exterior colors and materials shall be consistent with the final approved plans.

30. Plans submitted for building permit issuance shall include civil plans and documents prepared by a licensed civil engineer that include dedications and all improvements required herein, architectural plans prepared by a California licensed architect, and landscape plans. All plan sheets shall be internally consistent.

31. Plans submitted for building permit issuance shall meet all requirements of the Building, Fire, Public Works and Water Departments.

32. The plans submitted for building permit issuance shall include the following details and/or modifications, subject to review and approval by the Zoning Administrator:

    (a) Plans shall show the height of the building(s) measured to the top of the parapet walls and shall conform with all applicable height requirements.
    (b) Plans shall demonstrate that awnings do not project greater than 6 feet into the public right of way.
    (c) The buildings shall have high quality exterior materials with durable, matte finishes.
    (d) Materials and cross sections showing window and door relief for the replicated storefront facades at 418 and 428 Front Street.

(e) The plans shall include the use of high quality, operable, upper floor windows that are recessed at least six inches from building face.

(f) The window and door schedules shall clearly note the sound transmission class (STC) ratings for all exterior windows and doors and the ratings shall comply with the recommendations of the Noise Assessment prepared by Charles M. Salter Associates, Inc., dated November 7, 2018. Noise ratings shall also comply with all building codes and shall take into consideration all on-site noise generating equipment. (Mitigation Noise-1)

(g) An exterior lighting plan shall be provided which shall indicate that all exterior building lighting and landscape lighting is downward-facing and shielded to contain the light source and to minimize off-site glare, and shall demonstrate that all exterior lighting has the ability to provide warm, low-level lighting from sundown to 10 p.m. nightly. Sufficient exterior lighting shall be provided within the pedestrian passageways, the sidewalk, within recessed areas, and within the parking garages to provide security and safety to pedestrians at night.

(h) Security cameras shall be provided in the parking garages, exterior stairwells, rooftop open space areas, ingress and egress of parking lots, courtyards, and 360-degrees around the exterior of the building. Recordings shall be accessible to police within 24 hours with a 30-day retention capability.

(i) All new mechanical equipment and appurtenances, including but not limited to gas and water meters, electrical boxes, roof vents, air conditioners, and antennas that are visible from the public way, the Riverwalk, and from adjacent properties, shall be screened with materials compatible with the materials of the building and shall be subject to the approval of the Zoning Administrator. Rooftop equipment shall meet all setback requirements of the Downtown Plan.

(j) Ground floor and Riverwalk-facing storefront glass shall be clear, transparent glass and shall not be reflective, tinted, mirrored or otherwise screened from public view.

(k) The plans shall not include flex/commercial space on the ground floor facing Front Street. All tenant spaces shall be labeled for commercial uses only with the exception of amenity and common spaces such as entryways to the residential units and leasing office/lobby spaces, as shown on the plans.

(l) All commercial spaces shall be constructed to support a future food service use. Plans must include ducting and venting plans for all commercial spaces. All ducting and venting should be designed to be hidden or incorporated into the building design. Plans shall also show the locations of grease traps, grease lines, and grease storage facilities.

(m) Plans shall reflect an increased mailroom size and the applicant shall provide confirmation that the mailroom meets the size regulations of the United States Postal Service (USPS).

(n) If the project includes the removal of access to the two existing parking spaces on APN 005-151-50 which are currently utilized by APN 005-151-49, then the property owner of APN 005-151-49 shall be responsible for paying in-lieu fees to the Downtown Parking District pursuant to City Council Resolution No. NS-29,538.

(o) Terraced fill between the Riverwalk and the building shall not exceed a height of 24 inches.

(p) Signage shall be included within the parking garage that specifies commercial and residential parking spaces.
(q) Skateboarding mitigation measures, as required by the Police Department , shall be shown on the plans at all stairways, benches, and planters along the pedestrian pathways, Front Street frontage, and Riverwalk facing frontage.

33. Trash Enclosure. The trash enclosure shall be accessible from the Front Street frontage. If the applicant chooses to instead make the trash container or bins accessible from Front Street, the container/bins shall be removed immediately after emptying to ensure that the bike lane is not obstructed. The trash enclosure shall meet all of the requirements of the Department of Public Works including but not limited to the following features: a 15 yard compactor, a 4 yard mixed recyclables container, 4 yard cardboard container and a 2 yard food waste container. The trash enclosure design shall include a roof to keep storm water from leeching pollutants from the area where the containers are stored and to secure the area from unauthorized entry; a floor drain installed in the slab and connected to the sanitary sewer system; and a hose bib for the purpose of cleaning the interior of the structure. The final trash enclosure design shall be subject to review and approval by the Public Works Department. Please see "City of Santa Cruz Department of Public Works Refuse Container Storage Facility Standard Design Policy."

34. Bird-Safe Design. The plans submitted for building permit issuance shall identify the use of bird-safe, ultraviolet, and/or patterned glass, or other material or method proven to discourage bird strikes, at the windows and balcony railings up to 40-feet in height, with the exception of ground floor glass. Mirrored and/or reflective glass is not permitted anywhere on the building. Uplighting and spotlights are not permitted within any of the landscaped areas.

35. Traffic Engineering. The applicant shall submit the final engineered design for access improvements to and from the site and for improvements to the public right-of-ways, including but not limited to, a 'right turn in/right turn out only' restriction at the garage entrance, a double gate system with a roll down gate at the sidewalk which shall be left open during the day and closed at night and gate arms located at least 75 feet into the garage to allow for queuing of vehicles during peak times, card readers, and rapid gate system. The plans shall include multi-use levee pathway improvements from Soquel Ave to the southern end of the project site. The pathway shall be improved to accommodate a maintenance vehicle that will be servicing the private storm system. The pathway width will need to match the existing 12' wide pathway, as directed by the City of Santa Cruz Public Works Dept. These improvements shall also include a new substantial asphalt concrete pathway section and a concrete parking pad for the service truck that will be maintaining the on-site private storm water system. Plans shall also include improved green bike lane striping across the two driveways.

36. Transportation Demand Management (TDM). TDM measures shall be prepared and implemented to achieve reduced vehicle miles traveled consistent with Climate Action Plan and General Plan goals and objectives, including but not limited to:

- Provide at least one parking space for, and subsidizing if necessary, a car share program (i.e. zip car) in the publically accessible portion of the parking facility. If unable to secure a partnership with a car share program, this space shall be marked for carpool vehicles.

- Provide information to all residents to enroll in the Cruz511 commute management platform and provide city-provided alternative commute information to all residents.

- Require all non-residential uses to enroll in Cruz511/GO Santa Cruz TDM program and provide GO Santa Cruz brochures to all new employees.

- Enter in to a contract agreement with METRO to provide reimbursable transit passes to all residents. The applicant shall contact John Urgo (jurgo@scmtd.com) at Santa Cruz METRO to develop a reimbursable pass program. Desired program parameters include distribution of transit passes to all residents of the project, where project will reimburse METRO on a monthly/quarterly basis for all rides used. Final agreement will be between project sponsor and METRO and the city shall receive annual reports of total ridership.

37. Electric Vehicle Supply Equipment (EVSE) Installed. Plans shall demonstrate that all EVSE installed parking spaces are provided as required per Section 24.12.241 of the Zoning Ordinance. The project requires a minimum of 17 residential and 2 commercial EVSE installed spaces based on the total of 142 residential and45 commercial parking spaces provided. Additional EVSE installed spaces are highly encouraged.

38. Parking. Plans shall demonstrate that all standard parking spaces shall have minimum dimensions of 8.5 feet x 19 feet and all compact parking spaces shall have minimum dimensions of 7.5 feet x 16 feet. Specifications of equipment and an operations plan shall be provided for all parking stackers and lifts.

39. Bike Parking. Plans shall demonstrate that all bike parking has been provided per Section 24.12.250 if the Zoning Ordinance. Currently, the project requires a minimum of 175 Class 1 spaces and a minimum of 44 Class 2 spaces to serve the residential units, and a minimum of one Class 1 space and five Class 2 spaces to serve the commercial uses. The plans shall include specifications for the Class 2 bike parking racks including manufacturer, dimensions, and design, and a description of the access privileges to any proposed secure bike parking areas.

40. Landscaping. Landscape and irrigation plans shall be submitted at the time of the building permit application and are subject to review and approval by the Planning Department, the Public Works Department, and the Water Department. The landscape and irrigation plans shall demonstrate compliance with all requirements of the City's Water-Efficient Landscaping Ordinance in Chapter 16.16 of the Santa Cruz Municipal Code prior to issuance of the building permit. Plans submitted for building permit issuance shall reflect the same design, quality of materials, extent of landscaping, site and outdoor

improvements, and recreational and design features as shown on the plans. Changes will require modifications to this permit.

(a) All new street trees shall be a minimum 24-inch box size and the species shall be approved by the City Urban Forester.

(b) The plans shall include a tree protection plan for all street trees to be preserved. The plan shall comply with the Tree Protection Guidelines and Restrictions, provided in the Arborist Report prepared by Kurt Fouts, dated September 9, 2019, and shall be approved by the City Urban Forester.

(c) The landscape architect shall confirm that all proposed plans are non-invasive. Native plants and drought-tolerant plants are encouraged.

(d) The owner shall provide evidence that the planting plan for the levee extension area was approved by the Army Corps of Engineers.

(e) Landscaping plans shall show that new plantings that are located at the edge of the Riverwalk path shall be planted in the ground and not in a planter.

(f) The applicant shall replace any city irrigation lines along the levee that are affected by the project.

(g) All plantings installed by the city as part of the Public Works Levee Lighting Grant, shall be replaced in-kind pursuant to the Levee Lighting Project, as required by the Public Works Department.

41. Utilities. All utilities and transformer boxes associated with the private development shall be placed underground in accordance with the provisions of Section 24.12.700 through 24.12.740 of the Zoning Ordinance and shall not encroach into the public right-of-way.

42. Drainage/Erosion Control. A drainage plan and erosion control plan shall be submitted in conjunction with application for building permits. All erosion control features shall be installed by November 1.

43. Construction Access/Staging Plan. The building permit plans shall include a construction plan that indicates site access areas, staging areas, and parking areas for construction vehicles during all phases of construction. The construction plan shall clearly indicate that vehicles and equipment will not be parked on the street in front of existing adjacent businesses or on the levee or Riverwalk path. The hours of construction shall comply with Chapter 9.36 of the Municipal Code.

44. Air Quality: Prior to issuance of a building permit for the project, the applicant shall provide the Zoning Administrator with written verification that all permit requirements of the Monterey Bay Air Resources District relative to asbestos investigation and disposal, if necessary, have been fulfilled in accordance with Federal, State and local laws.

45. Nesting Bird Surveys. The applicant shall schedule construction and tree removal to take place between September 1 and January 30 of any given year to avoid the nesting season for birds. If this schedule is not practical, the applicant shall require a pre-construction nesting survey be conducted by a qualified wildlife biologist if construction, including tree removal, adjacent to the San Lorenzo River is scheduled to begin between February 1 and September 1 to determine if nesting birds are in the vicinity of the construction sites. If nesting raptors or other nesting species protected under the Migratory Bird Treaty Act (MBTA) are found, construction may need to be delayed until late September or after the wildlife biologist has determined the nest is no longer in use or unless a suitable construction buffer zone can be identified by the biologist. (Citywide Creeks and Wetlands Management Plan Standard 12).
(Mitigation Measure 4.3-3)

46. Stormwater. Plans must comply with Chapter 6B of the City's Best Management Practices Manual-Storm Water BMPs for Private and Public Development Projects, which is available at www.cityofsantacruz.com/LID. Please submit the following items:

    (a) Storm Water Control Plan (SWCP): A final SWCP shall be submitted as part of the project's Building Permit application. The SWCP shall also be submitted in an 8 ½ x 11 inch report format. An electronic copy of the SWCP may be emailed to Suzanne Healy, Associate Planner, at shealy@cityofsantacruz.com.
    (b) Submit an Operations and Maintenance Plan (O&M Plan): The O&M Plan shall include at a minimum: 1) site plan showing the location of drainage structures and structural control measures, 2) O&M procedures, timing, and frequency for maintenance of LID features and drainage systems, and include applicable BMPs from Chapter 6B of the City's Best Management Practices Manual Storm Water BMPs for Private and Public Development Projects, 3) cost estimates for maintenance, and 4) BMPs for any Special Site Conditions (see pages 30-31), e.g. trash enclosure, parking, etc.
    (c) A final O&M Plan shall be submitted as part of the project's Building Permit application. The O&M Plan shall be submitted in an 8 ½ x 11 inch report format, and can be included as a SWCP appendix. The signed Maintenance Agreement shall be included in the O&M Plan as an attachment. An electronic copy of the O&M Plan may be emailed to Suzanne Healy, Associate Planner, at shealy@cityofsantacruz.com.
    (d) Maintenance Agreement: Prior to issuance of the Building Permit, the property owner shall sign and submit a BMP maintenance agreement ensuring that they will provide long-term operation and maintenance of structural storm water control measures (see template in Appendix C of Chapter 6B Storm Water BMPs for Private and Public Development Projects). The O&M Plan shall be attached to the signed maintenance agreement. A copy of the signed Maintenance Agreement may be emailed to Suzanne Healy, Associate Planner-PW, at: shealy@cityofsantacruz.com.

(e) The Maintenance Agreement must be included or attached to any HOA agreement if applicable and/or recorded in the CCRs with proof of CCR recordation submitted to the City.

(f) Storm Water LID (Source Control) - Additional source control measures are required if the project will include any of the following site conditions: commercial/industrial facilities, material storage areas, vehicle fueling/maintenance/wash areas, equipment and accessory wash areas, parking garages, outdoor parking areas, pools/spas/water features, trash storage areas, and food service or food processing facilities.

(g) Erosion Control Plan (ECP): An ECP shall be submited with the project's Building Permit application. The ECP shall show the location of all erosion & sediment control BMPs, including the items below, and shall include a detail or typical diagram for each BMP:

1. Perimeter BMPs, such as straw wattles and fiber rolls, to prevent off-site migration of soil, sediment, pollutants, litter, etc.
2. Stabilized construction entrance/exit.
3. Porta-potty
4. Material or soil stockpile pile areas: Please show location and indicate which BMPs will be used to cover and protect stockpiles from run-on and run-off.
5. Storm drain inlets & catch basins (if applicable): Please show on-site and any nearby downstream storm drain inlets/catch basins in the street or parking areas. Please include BMPs to protect storm drain inlets/ catch basins during construction such as catch basin filter fabric or inserts. (Sand bags, gravel bags and straw wattles around storm drain inlets exposed to street traffic are not recommended). If filter fabric, please use Filtrex 8" Soxx with Mirafi140N fabric (or similar) underneath the grate, appropriately sized and secured.
6. On the Erosion Control Sheet, please add the following wording:
    - Construction Best Management Practices (BMPs): Project construction and demolition activities shall comply with the City's Storm Water Best Management Practices for Construction. See the City Website at: http://www.cityofsantacruz.com/home/showdocument?id=6031
    - BMPs, such as fiber rolls or wattles, shall be inspected periodically during construction and after each significant rain event, and any needed repairs made immediately.
    - Check the sidewalk and street daily during the demolition and construction phases for soil or sediment drag-out, and sweep if needed.
    - Open bags of particulate, granular or powder materials (such as plaster or concrete) and paints should be stored inside if possible. If these items are stored outside, they must be kept covered/closed and during the rainy season also kept within secondary containment.
    - Dumpster lids must be kept closed and secured when not in use.
    - Soil stockpiles: Excavated and/or new soil stockpiles must be protected from runoff/run-on by BMPs appropriate for the pile size, location and site conditions, and must be covered with plastic

sheeting or tarps when not in use and surrounded by berms, fiber rolls or wattles to prevent run-on and run-off. When excavated soil is moved off-site, check the sidewalk and street for dirt "drag out" and sweep if needed.

- Storm Drain Inlet/Catch Basin Protection (if applicable): Please use filter fabric or inserts for downstream catch basins located on streets. If filter fabric, please use Filtrex 8" Soxx with Mirafi 140N fabric (or similar) underneath the grate, appropriately sized and secured, during construction. Ensure fabric extends a minimum of 6-inches beyond catch basin after placement of grate. Contractor shall remove filter fabric upon completion of project.
- Erosion/sediment control BMPs: Check erosion/sediment control measures/BMPs regularly for damage during construction work. All erosion/sediment control measures shall be inspected after each significant rain event and repairs made immediately upon detection. During the rainy season, use one or more sediment control measures, such as fiber rolls and straw wattles, to prevent sediment from leaving the site.

(h) Landscape Plan or Bio-Retention Areas: Landscape plans should include notes regarding mulch and special notes for bio-retention/rain garden areas as applicable:

1. Mulch: No more than 3 inches of mulch on exposed soil surfaces. If possible, use aged, stabilized, non-floating mulch. Mulch stockpiles: Mulch should be located and stored in such a manner that there is no discharge to the storm drain system. Please specify which BMPs will be used.
2. Wood mulch should not be placed within the ponding area of bio-retention/rain garden areas. Only non-floating mulch shall be used in these areas, such as inorganic mulch (pea gravel, river pebbles or similar products.
3. Fertilizers should not be added in bio-retention, bio-swale or rain garden areas.
4. Plants: Ensure that plants proposed in bio-retention or rain garden areas can withstand both wet feet and drought conditions. For a list of recommended bio-retention plants, please see the website of the Central Coast Low-Impact Development Initiative at http://centralcoastlidi.org/landscape.php.
5. The soil mix to be used in bio-retention/rain garden areas shall be a homogeneous mix of 60-70% fine sand (meeting ASTM D422 or Caltrans Test Method C202) and 30-40% weed-free, manure-free, stable compost. Note: All sands complying with ASTM C33 for fine aggregate comply with sieve size/gradation requirements. The soil mix/media to be used in bio-retention/rain garden areas shall have a minimum infiltration rate of 5 in/hr.

(i) Construction Dewatering Operations: There are several options for construction dewatering discharges that can't be managed on site. One potential option is discharge under a permit from the State Water Board/Regional Water Quality Control Board (e.g. Low-Threat Discharge Permits, Highly Treated Groundwater Discharge Permit, etc.). Please contact the Central Coast Regional Water Quality Control Board for more information at 805-549-3147 or refer to their website at: http://www.waterboards.ca.gov/centralcoast/

Another option is discharge to the sanitary sewer system under a permit from the City. For more information about this permit, including the application process, requirements and fees, please contact a City Public Works Environmental Compliance Inspector at 831-420-5160.

(j) State Construction General Permit: If the project will disturb one acre or more of soil (or is less than one acre but part of a larger development), a Notice of Intent (NOI) must be filed with the State Water Resource Control Board (SWRCB) to obtain coverage under the NPDES General Permit for Storm Water Discharges Associated with Construction and Land Disturbance Activities (Construction General Permit) prior to commencing work. The applicant is responsible for filing a Notice of Intent and for developing a Storm Water Pollution Prevention Plan (SWPPP). Prior to issuance of a building permit, the applicant shall provide the City with proof of coverage under the State Construction General Permit, including a copy of the letter of receipt and Waste Discharger Identification (WDID) number issued by the SWQCB that acknowledges the property owner's submittal of a complete Notice of Intent (NOI) package. For more information on the Construction General Permit, please see the State Water Board website: http://www.waterboards.ca.gov/water_issues/programs/stormwater/construction.shtml

47. Inclusionary Housing and Density Bonus. The project was deemed complete on July 19, 2019 and is subject to the inclusionary housing requirements provided in Ordinance 2018-18 (15% inclusionary requirement). The project also includes a Density Bonus and is subject to the requirements of Part 3 of Chapter 24.16. Specifically, the project includes 133 base units, which results in a requirement for 20 Inclusionary Units at the Lower Income level or 80% Area Median Income (AMI). In order to be eligible for the proposed density bonus, a minimum of 15 units (11%) must be restricted to households that meet the Very Low Income level of 50% AMI and the remaining five inclusionary units must be made available for rent or sale to households at the Low Income level (80% AMI).

48. Historic Documentation. Prior to issuance of a demolition permit, the applicant shall complete documentation of the buildings at 418 and 428 Front Street in accordance with the Historic American Buildings Survey (HABS) standards, which includes the following: (Mitigation Measure CUL-1)

(a) Project proponent shall work with a qualified architectural historian to prepare local-level HABS documentation, as detailed below. HABS level photographs must be completed prior to demolition and construction of the Project. The full HABS documentation must be complete prior to completion of the proposed Project. Copies of the HABS shall be provided to local Santa Cruz repositories.

(b) Measured Drawings: Select existing drawings, where available, should be reproduced on mylar. If existing historic drawings do not exist, a digital and hard copy set of measured drawings that depict the existing size, scale, and dimension of the subject property shall be produced. The measured drawing set shall include a site plan, sections, and other drawings as needed to depict existing conditions of the property. The scope of the drawing package will be reviewed and approved by local Planning Department staff prior to commencement of the task. All drawings shall be created according to the latest HABS Drawings Guidelines by the National Park Service. The measured drawings shall be produced by a

qualified professional who meets the standards for architecture set forth by the Secretary of the Interior's Professional Qualification Standards (36 Code of Federal Regulations, Part 61).

(c) HABS- Level Photographs: Black and white large format negatives and prints of the interior, exterior, and setting of the subject property shall be produced. The photographs must adequately document the character-defining features and setting of the historic resource. Planning Department staff will review and approve the scope (including views and number) of photographs required prior to the commencement of this task. All photography shall be conducted according to the latest HABS Photography Guidelines by the National Park Service. The photographs shall be produced by a qualified professional photographer with demonstrated experience in HABS photography.

(d) HABS Historical Report: A written narrative historical report, per HABS Historic Report Guidelines, shall be produced. The report shall include historical information, including the physical history and historic context of the building, and an architectural description of the site setting, exterior, and interior of the building. The report shall be prepared by a qualified professional who meets the standards for history or architectural history set forth by the Secretary of the Interior's Professional Qualification Standards (36 Code of Federal Regulations, Part 61). Archival copies of the drawings, photographs, and report shall be submitted to the Planning Department, and to repositories including but not limited to the San Francisco Public Library, Northwest Information Center, and California Historical Society. This mitigation measure would create a collection of reference materials that would be available to the public and inform future research.

49. Historic Interpretative Display: Prior to the issuance of a demolition permit or building permit, the applicant shall hire a qualified architectural historian to create an interpretative display plan that addresses the historical significance of the two historical buildings that are being demolished. The interpretative display must be located within the proposed project boundary along a pedestrian walkway or attached to the new building so that it is visible to the general public. Interpretation typically involves development of interpretive displays about the history of the affected historical resources. These displays may include a high-quality permanent digital interpretive website, or a temporary exhibition or interpretive display installed at a local cultural institution or publicly accessible location on or near the project site. The interpretive displays shall illustrate the contextual history and the architecture of the buildings, and of the general building typology (e.g. Commercial Buildings Design in the Automobile Age), and shall include, but not be limited to, historic and contemporary photographs, narrative text, historic news articles and memorabilia, salvaged materials, and maps. (Mitigation Measure CUL-2)

50. Prior to issuance of a building permit, the property owner shall complete a Flood Zone Hazard Notice Form.

51. Fees. The following fees shall be paid prior to building permit issuance in addition to all other fees required for building permit issuance:

(a) The applicant shall pay required Traffic Impact Fees (TIF) unless phased or deferred payment terms are approved by the Planning and Public Works' Directors. The TIF is currently estimated at $254,000.

(b) The applicant shall pay the Park and Recreation Facility Tax pursuant to Chapter 5.72 of the City of Santa Cruz Municipal Code based on the final building permit plans. The open space provided at the levee does not qualify as park space provided by the project.

(c) The applicant shall pay all applicable parking fees required in the Downtown Parking District. The fees that apply to the project are those that are in effect at the time of building permit issuance. The fees shall be paid in full unless an alternate payment plan is approved in advance by the Director of Public Works.

(d) The applicant shall agree to participate, on a fair share basis, in intersection improvement projects at Front/Soquel, Front/Laurel and Pacific/Laurel as noted in Traffic Impact Study (TIS) which is 22.53% of the cost of design and construction. That is currently estimated at $340,361. Construction cost estimates may be revised and could impact this calculation once the projects are designed. Construction is the responsibility of the city, not the applicant.

(e) The applicant shall pay the full cost of signal revision (design and construction) at the Front/Metro/project driveway intersection. This work shall be completed by the applicant as a part of the project. The applicant's designer shall provide a traffic signal timing and coordination plan to the Public Works Department for review and approval.

(f) The applicant shall agree to participate, on a fair share basis, in the construction of a two way left-turn lane. The fair share calculation reflected in the TIS may need to be revised based on a different cost share for Front Street developments only. The two-way left turn lane shall be implemented prior or post development as determined by the City.

(g) The applicant shall pay required Public Works On-Site and Off-Site Public Improvements Inspection Fee based on the final building permit plans.

DURING CONSTRUCTION:

52. Tree Preservation: Prior to site grading or any disturbance, all trees and/or tree stands indicated for preservation or approved plans shall be protected through fencing or other approved barricade. Such fencing shall protect vegetation during construction and shall be installed to the satisfaction of the Director of Planning and Community Development.

53. Archaeological/Cultural or Paleontological Discoveries. Any person exercising a development permit or building permit who, at any time in the preparation for or process of

excavating or otherwise disturbing earth, discovers any human remains of any age or any artifact or any other object which reasonably appears to be evidence of an archaeological/cultural resource or paleontological resource, shall:

a. Immediately cease all further excavation, disturbance, and work on the project site;
b. Cause staking to be placed completely around the area of discovery by visible stakes not more than ten feet apart forming a circle having a radius of not less than one hundred feet from the point of discovery; provided, that such staking need not take place on adjoining property unless the owner of the adjoining property authorizes such staking;
c. Notify the Santa Cruz County sheriff-coroner and the city of Santa Cruz planning director of the discovery unless no human remains have been discovered, in which case the property owner shall notify only the planning director;
d. Grant permission to all duly authorized representatives of the sheriff-coroner and the planning director to enter onto the property and to take all actions consistent with this section.

54. <u>Grading.</u>

- All grading shall be done in accordance with the latest City of Santa Cruz Municipal Code, Chapter 24.27.
- All work shall be in accordance with recommendations specified in the geotechnical investigation report prepared.
- All clearing, site preparation or earth work shall be performed under inspection by the Soils Engineer and to the satisfaction of the Soils Engineer.
- Dust caused by the grading operations shall be controlled by proper watering.
- A grading permit from the Chief Building Official will be required prior to commencement of work.
- A pre-grading conference at the site is required prior to the start of grading with the following people present: owner, contractor, engineer, soils engineer, and City Inspector, or their representatives.
- The engineer will inspect the site after grading has been completed, and inform the City of Santa Cruz whether grading was done in conformance with the grading plans.
- Plans set forth in the schedule, location, and type of planting shall be submitted to the Planning Department for approval upon completion.
- Work shall be done in accordance with approval plans on file in the Building Department.
- Grading shall be done during periods of dry weather, and protective measures shall be incorporated during grading to prevent siltation from any grading project halted due to rain. No earth-moving activities shall occur between October 15 and April 1 unless a winter grading permit is issued by the Building Department.

55. All refuse and recycling activities during construction shall be done in accordance with Chapter 6.12 of the Santa Cruz Municipal Code. Be aware that private companies offering refuse or debris box services are not allowed to operate within the City limits, except under certain limited circumstances detailed in Chapter 6.12.160.

PRIOR TO BUILDING PERMIT FINAL/OCCUPANCY:

56. All requirements of the Building, Fire, Public Works and Water Departments shall be completed prior to occupancy and continuously maintained thereafter.

57. The applicant shall file a trespass letter with the police department every year with proper No Trespassing signage to help enforce trespassing issues.

58. Adequate provisions shall be made to supply water to each of the premises covered by this application. The design of water facilities shall be to standards of the Water Department, and plans therefore must be submitted to the Water Department Director for review and approval prior to the issuance of a building permit.

59. The property owner shall enter into an agreement with the City of Santa Cruz to secure an 18-month bond for landscape maintenance prior to occupancy.

60. All landscaping shall be installed prior to final utility release or issuance of occupancy permits.

61. Easement Agreement for Fill Structure. The applicant shall work with the Public Works Department to record an easement agreement addressing the fill structure adjacent to the levee. The easement agreement shall confirm that the applicant is responsible for ongoing maintenance of the fill area and any damage to the levee resulting from installation or maintenance of the fill, the project or associated work. It shall also be specific as to the design, engineering, and construction of the fill including detailing all utilities, both public and private, within the fill structure. The easement agreement shall also include the tree maintenance responsibilities per the flood control improvement project.

62. Extension Area. Prior to Issuance of a Certificate of Occupancy for the Project, including any Temporary Certificates of Occupancy, Owner shall execute an Agreement with the City by which the Owner shall provide, at Owner's sole cost, the ongoing maintenance and security of all exterior areas of the project, including, without exception, all public and extension areas, such as landscape, furnishings, and improvements along the Riverwalk. This Agreement may establish maintenance credits for the Owner toward any applicable Extension Area Fees based upon Owner's annually documented cost of maintenance and security for the public areas.

63. Revocable License. The Owner or its Tenants, shall be required to execute a Revocable License Agreement with the City for commercial use of any public space included in or adjacent to the Project, under the City's Outdoor Extension Area Ordinance (Santa Cruz Municipal Code Section 24.10.2340). This requirement shall apply regardless of any easement rights that may be granted. The Owner may use credits, if established by the aforementioned Maintenance Agreement, toward any applicable Extension Area fees required by the City for such Extension Areas.

OPERATIONAL CONDITIONS:

64. Prior to commercial/business use of a building or site, owners or tenants shall obtain a Zoning Clearance/Occupancy Permit from the City Planning Department and a Business License from the City Finance Department.

65. Residential portion of on-site parking shall not be not be eligible for Downtown Parking District Permits, until an overnight residential permit is developed and made available.

66. All requirements of the Building, Fire, Public Works and Water Departments shall be continuously maintained.

67. The property owner shall be responsible for the continued maintenance of the building and site in good condition.

68. No signs shall be installed on the site without prior approval of a Master Sign Program.

69. The property owner shall be responsible for the on-going maintenance of the building and site in good condition including maintenance of exterior materials, landscaping, sidewalks, street furniture, lighting, open space areas, upper floor balconies free of clutter, appropriate window treatments, and the parking garages.

70. The open space area at the Riverwalk and the two pedestrian passageways shall remain open to the public during the daytime and during business hours.

71. Future retail uses at the Riverwalk require prior approval of an Administrative Use Permit or as required by the Downtown Plan.

72. This permit does allow for the service of alcohol or live entertainment with future commercial uses. Any proposed alcohol or live entertainment uses shall obtain approval of a separate Use Permit and/or entertainment permit.

73. All outdoor seating areas shall comply with noise limitations specified in Section 24.14.260 of the Zoning Ordinance

74. Outdoor amplified music is not permitted if it is audible from off-site.

75. Store displays shall be configured in such a way as to allow pedestrians to see into the store from the sidewalk. Goods, posters, photos or other visual images shall be placed a sufficient distance from the store windows to enable pedestrians to see clearly into the store

76. All future storefronts shall include storefront landscaping consistent with the requirements in Chapter 4, Section I(4) of the Downtown Plan.

77. Buildings shall provide warm (color temperature equal to incandescent), low-level lighting from sundown to 10:00 PM nightly as an integral part of the façade design to add to the nighttime ambient light level in the downtown and to add nighttime visual interest to the buildings.

Sara DeLeon

From:	Gina Cole <director@bikesantacruzcounty.org>
Sent:	Thursday, August 27, 2020 11:12 PM
To:	City Plan
Cc:	Samantha Haschert; deidre@hamiltonlandplanning.com; Peggy Dolgenos
Subject:	Proposed Riverfront (Front Street) Project
Attachments:	2020.6.8. Front St_Riverfront Apts. BSCC letter (2) (1).pdf; vehicle parked into the Front St bike lane (1).jpg; example of dual stairs and ramp (1).JPG; end of Cathcart showing ramp around steps in urban river plan (1).pdf

August 27, 2020

City of Santa Cruz Planning Commission
809 Center Street
Santa Cruz, CA 95060
cityplan@cityofsantacruz.com

RE: Proposed Riverfront (Front Street) Project

Dear Commissioners,

Bike Santa Cruz continues to request that there be a rideable bicycle connection between the Riverwalk levee and Front Street to replace the one at Elm Street, proposed to be lost by the construction of the Riverfront project. We truly appreciate the applicants taking time to meet with us and describe how the current design of their project would not be able to accommodate bike riders. We now understand that the design would have to be modified to incorporate a rideable bike path.

The Final EIR explains that while the language of the Downtown Area Plan and other official planning documents do not explicitly require a bike path in this location, these documents **all** strongly support improving and expanding bicycle facilities in the City. Per the Final EIR, "a new policy (6-SLR-5.2) was added that requires new development projects to incorporate pedestrian and/or bicycle connections between Front Street and the Riverwalk at appropriate locations such as the extensions from Maple Street and Elm Street." Unfortunately, a staircase with a "bike rail" in which a rider must dismount to push their bicycle up, or dismount to guide their bicycle down to access or exit the Riverwalk levee does not provide equitable access for many cyclists. An elevator might not either.

We did note that the EIR also states, "The commenter's recommendation for a "rideable" alternative to the proposed bike rail along the stairway is acknowledged, and will be further considered by City staff and decision makers." Thus, we appeal to your common sense to realize that this is still the perfect place and opportunity to ride a bicycle between the Riverwalk levee and Cathcart Street and nearby Downtown destinations --

an opportunity that will be lost for decades if this stretch of Front Street impedes bicycle access.

Please find attached our June 8, 2020, letter to the City of Santa Cruz Planning Department, photos of a vehicle in the bike lane on Front Street, a sample of a possible rideable access structure, and a sketch from the *River Plan.*

Sincerely,

Gina Gallino Cole
Executive Director
Bike Santa Cruz County
333 Soquel Ave.,
Santa Cruz, CA 95062
(831) 425-0665 office
(831) 840-1884 cell
bikesantacruzcounty.org

Table of Contents

00	Cover Sheet	C1.1	Title Sheet
01	Project Information	C1.2	Construction Notes
02	Context Perspective View	C2.1	Existing Condition Plan
03	Context Perspective View	C3.1	Demolition Plan
04	Context Perspective View	C4.1	Site Plan
05	Concept Perspective Views	C5.1	Grading Plan
06	Concept Perspective Views	C5.2	Site Sections
07	Sub-T Level Plan	C6.1	Utility Plan
08	Level 1 - Front Street Plan	C7.1	Storm Water Control Plan
09	Level 2 - Riverfront Plan	C8.1	Erosion Control Plan
10	Level 3 Plan	C8.2	Erosion Control Details
11	Level 4 Plan	C9.1	Construction Details
12	Level 5 Plan	C9.2	City Standard Details
13	Level 6 Plan		
14	Level 7 Plan		
15	Roof Plan		
16	Building Sections		
17	Building Sections		
18	Concept Elevations		
19	Concept Elevations		
20	Detail and Materials		
21	Bike Parking Exhibit		
22	Trash Exhibit		
L1	Conceptual Landscape Plan		
L2	Conceptual Landscape Imagery		
L3	Conceptual Perspective Views		
L4	Conceptual Perspective Views		
L5	Conceptual Perspective Views		
L6	Conceptual Perspective Views		

Vicinity Map

Date: 10/18/2019
Job #: 16319

RIVERFRONT PROJECT

Santa Cruz, CA

SUBMITTAL PACKAGE

Ownership:

SC RIVERFRONT

Landscape Architect:

The Guzzardo Partnership Inc.
Landscape Architects | Land Planners

Partner Architect:

Architect:

HUMPHREYS & PARTNERS ARCHITECTS, L.P.
5339 ALPHA ROAD · SUITE 300 · DALLAS, TEXAS 75240 - (972) 701 - 9639 · (972) 701 - 9639 FAX
DALLAS · CHICAGO · NEW ORLEANS · NEW YORK · NEWPORT BEACH · ORLANDO
SAN RAMON · SCOTTSDALE · EDMONTON · TORONTO · MONTEVIDEO
www.humphreys.com

Site Summary:

Site Area:	1.04 AC (45,178 sf)	Building Lot Coverage:	+/- 38,424 sf (excl. passageway stairs) (+/- 85%)
Number of Units:	175 du	Cathcart Passage:	+/-60' wide min. per SCDP Sect. E.5.c
Site Density:	+/- 168.7 du/AC	Elm St Passage:	+/-30' wide min. per SCDP Sect. E.5.c

PROJECT SUMMARY

RESIDENTIAL	#	NET SF*		deck	total NRSF	Ave NSF	Mix
Studio							
S1	22	480		-			
S1a	6	440		-			
S2	11	440		-			
S2a	5	440		-			
S3	1	428		212			
S3.1	2	441		220			
S4	1	431		200			
S5	5	448		-			
Subtotal Studio	**53**					457	30.3%
1-bedroom							
A1	50	677		64			
A1a	6	678		64			
A2	6	658		55			
A2.1	5	659		55			
A2a	7	636		55			
A2b	4	614		55			
A3	5	620		-			
A5	6	715		66			
Subtotal 1-bedroom	**89**					668	50.9%
2-bedroom							
B1	12	1,035		57			
B1.1	4	1,024		57			
B2	6	971		55			
B2.1	6	983		55			
TH	5	1,273		127			
Subtotal 2-bedroom	**33**					1,049	18.9%
Total	**175**			**8,249**	**118,285**	**676**	

*NOTE: sf taken to outside of walls and CL of parti walls

*NOTE: sf is approx. and subject to change as more information is known

Amenity Summary:

Commercial:	
Commercial A:	525
Commercial B:	1,141
Commercial C (rest):	3,114
Commercial D:	352
Commercial E:	732
Commercial F (rest):	2,727
Commercial G:	1,042
Commercial H:	1,865
Total Commercial:	**11,498** sf

Amenity:	
Leasing	1,065
Lounge:	1,709
Game Room:	715
Specialty Fitness/ Fitness:	1,926
Circ., Unisex.:	644
Total Amenity:	**6,059** sf

Lobbies:	
Lobby B1:	291
Lobby B2:	359
Lobby B3 (mail):	578
Lobby Commercial:	340
Total Lobbies:	**1,568** sf

Private Outdoor Space:	
Skydeck B2:	1,241
Skydeck B3:	1,248
Total Private O.S.:	**2,489** sf

Gross SF Summary:

	Building 1	Building 2	Building 3	Shared	total
Level 1:	-	-	-	38,458	38,458
Level 2:	5,678	12,790	10,165	-	28,633
Level 3:	5,795	12,587	9,288	-	27,670
Level 4:	5,395	11,812	8,902	-	26,109
Level 5:	4,628	10,640	8,505	-	23,773
Level 6:	4,628	10,638	8,507	-	23,773
Level 7	4,628	8,681	6,969	-	20,278
Total	**30,752**	**67,148**	**52,336**	**38,458**	**188,694**
Level B1:	-	-	-	40,728	40,728

*NOTE: basement not included in GSF

*NOTE: sf taken to outside of walls

*NOTE: sf is approx. and subject to change as more information is known

Net Lot Area:	45,178
FAR:	4.18

Per SCMC 24.22.366, Floor Area: The sum of the gross horizontal real floor area within the perimeter of the outside walls of all buildings, including accessory buildings and accessory dwelling units, on a lot as measured from the exterior surface of the exterior walls, with no deduction for hallways, stairs, closets, wall thickness. The area includes covered residential parking and is the total of all stories. Stairways shall count only once for floor area, however, any portions of buildings, including stairwells, over seventeen feet in interior height, are counted twice for the purposes of computing floor area. Uncovered courtyards or atriums enclosed by three sides and with the space open to the street above the first floor do not count as floor area. Unenclosed porches, balconies, decks, patios, roof overhangs and similar architectural features and non-habitable basements that are fully subterranean below finished grade do not count as floor area.

Units Breakdown Per Building Summary:

	North building						Middle building						South building						Subtotal
	level 2	level 3	level 4	level 5	level 6	level 7	level 2	level 3	level 4	level 5	level 6	level 7	level 2	level 3	level 4	level 5	level 6	level 7	
Studio																			
S1	1	2	2	1	1	1	1	1	1	-	-	-	1	2	2	2	2	2	22
S1a	1	1	1	1	1	1	-	-	-	-	-	-	-	-	-	-	-	-	6
S2	-	-	-	-	-	-	-	-	-	-	-	-	1	2	2	2	2	2	11
S2a	-	1	1	1	1	1	-	-	-	-	-	-	-	-	-	-	-	-	5
S3	-	-	-	-	-	-	-	-	-	-	-	-	-	-	-	-	-	1	1
S3.1	-	-	-	-	-	-	-	-	-	-	-	2	-	-	-	-	-	-	2
S4	-	-	-	-	-	-	-	-	-	-	-	1	-	-	-	-	-	-	1
S5	-	1	1	1	1	1	-	-	-	-	-	-	-	-	-	-	-	-	5
1-bedroom																			
A1	-	-	-	-	-	-	5	6	6	6	3	2	2	5	5	5	3	2	50
A1a	-	-	-	-	-	-	-	-	-	-	-	-	1	1	1	1	1	1	6
A2	-	-	-	1	1	1	-	-	-	-	-	-	-	-	1	1	1	-	6
A2.1	-	-	-	-	-	-	-	-	1	2	2	-	-	-	-	-	-	-	5
A2a	-	-	1	1	1	1	-	-	1	1	1	-	-	-	-	-	-	-	7
A2b	-	-	-	-	-	-	-	-	-	1	1	-	-	-	-	1	1	-	4
A3	-	1	1	-	-	-	1	1	1	-	-	-	-	-	-	-	-	-	5
A5	-	-	-	1	1	1	-	-	-	1	1	1	-	-	-	-	-	-	6
2-bedroom																			
B1	1	2	1	-	-	-	1	3	2	-	-	-	-	1	1	-	-	-	12
B1.1	-	-	-	-	-	-	1	1	-	-	-	-	1	1	-	-	-	-	4
B2	-	-	-	-	-	-	1	1	1	1	1	1	-	-	-	-	-	-	6
B2.1	-	-	-	-	-	-	1	1	1	1	1	1	-	-	-	-	-	-	6
TH	-	-	-	-	-	-	-	-	-	-	3	-	-	-	-	-	2	-	5
Subtotal	**3**	**8**	**8**	**7**	**7**	**7**	**11**	**14**	**14**	**13**	**13**	**8**	**6**	**12**	**12**	**12**	**12**	**8**	**175**
			40						**73**						**62**				

Parking Required:

Commercial:		sf	ratio		TOTAL	
Commercial:		11,498	1/400		29	
Leasing/ Fitness:		6,059	1/400		16	
Subtotal Commercial Req.:					**45**	**stalls**

Resident:	# unit	# beds	ratio		TOTAL	
Studio/1-bed	142	142	0.5	*(0.5/bedroom)*	71	
2-bed	33	66	0.5	*(0.5/bedroom)*	33	
Subtotal Resident Req:					**104**	**stalls**
Total Parking Required:					**149**	**stalls**

Parking Provided:

Commercial:		Level B1	Level 1	TOTAL	
Commercial Prime:	8.5' x 19'	-	35	35	
Commercial C:	7.5' x 16'	-	6	6	
Commercial Prime EV :	8.5' x 19'	-	2	2	
Commercial HC:	9' x 19'	-	2	2	
Subtotal Commercial Provided:				**45**	**stalls**

Resident:		Level B1	Level 1	TOTAL	
Prime:	8.5' x 19'	31	14	45	
Prime EV:	8.5' x 19'	14	3	17	
Compact:	7.5' x 16'	4	2	6	
HC:	9' x 19'	3	1	4	
T. Front:	8.5' x 19'	35	-	35	
T. Rear Standard:	8.5' x 19'	29	-	29	
T. Rear Compact:	8.5' x 16'	6	-	6	
Subtotal Resident Provided:		**122**	**20**	**142**	**stalls**
Total Provided:				**187**	**stalls**

*NOTE: 5 existing stalls on Front Street to be removed, see civil sheets for more information

EV Parking Summary:

Required EV Parking:
Residential:
17 stalls (12% of 142 stalls)

Commercial:
2 stalls (45 parking spaces per SCMC 24.12.241.3.b)

Provided EV Parking:
Residential:
17 stalls

Commercial:
2 stalls

Bike Parking Summary:

Required Bike Parking:
Residential:
175 'Class 1' spaces (1/ residential unit)
44 'Class 2' spaces (1/ 4 residential units)

Commercial:
7 (2 +15% of 29 commercial parking req.)

Provided Bike Parking:
Residential:
175 'Class 1' spaces (1/ residential unit)
44 'Class 2' spaces (1/ 4 residential units) (23 racks, see landscape sheet)

Commercial:
2 'Class 1' spaces (20%) (note: shown on level 1 plan in building lobby)
8 'Class 2' spaces (80%) (4 racks, see landscape sheet)

*note: each inverted-U style bike rack provides 2 parking spaces

RIVERFRONT PROJECT
SANTA CRUZ, CA
HPA #16319

PROJECT INFORMATION
10/18/19

SC RIVERFRONT

HUMPHREYS & PARTNERS ARCHITECTS, L.P.
5339 Alpha Rd., Suite 300, Dallas, TX 75240 | 972.701.9636 | www.humphreys.com

© 2019 by Humphreys & Partners Architects, L.P. The arrangements depicted herein are the sole property of Humphreys & Partners Architects, LP and may not be reproduced in any form without its written permission. Architectural conceptual site plans are for feasibility purpose only. Revisions may occur due to further investigation from regulatory authorities and building code analysis. Dimensions shown are of a strategic intent only. Refer to surveys and civil drawings for technical information and measurements.

VIEW 2. LOOKING NORTH WEST FROM LAUREL ST BRIDGE

VIEW 1. LOOKING NORTH WEST FROM BROADWAY ST

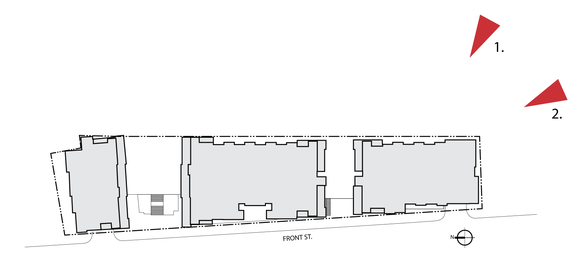

KEY PLAN

RIVERFRONT PROJECT
SANTA CRUZ, CA
HPA #16319

CONTEXT PERSPECTIVE VIEWS
10/18/19

SC RIVERFRONT

HUMPHREYS & **PARTNERS** ARCHITECTS, L.P.
5339 Alpha Rd., Suite 300, Dallas, TX 75240 | 972.701.9636 | www.humphreys.com

© 2019 by Humphreys & Partners Architects, L.P. The arrangements depicted herein are the sole property of Humphreys & Partners Architects, LP and may not be reproduced in any form without its written permission. Architectural conceptual site plans are for feasibility purpose only. Revisions may occur due to further investigation from regulatory authorities and building code analysis. Dimensions shown are of a strategic intent only. Refer to surveys and civil drawings for technical information and measurements.

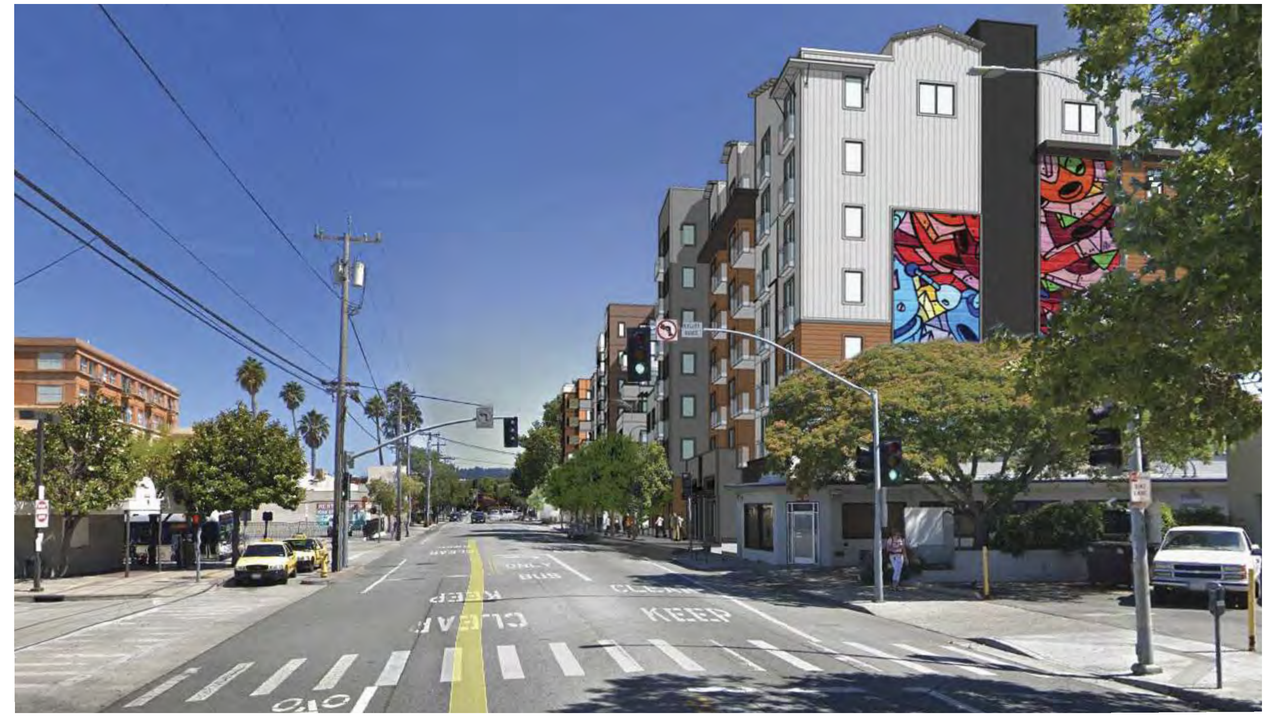

VIEW 4. LOOKING NORTH DOWN FRONT ST

VIEW 3. LOOKING EAST DOWN CATHCART ST

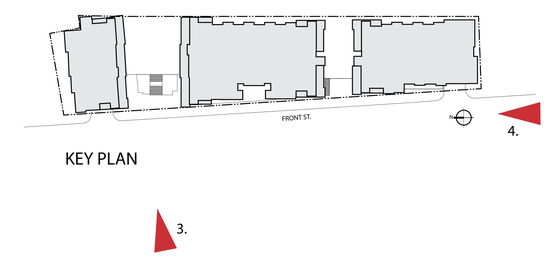

KEY PLAN

03

RIVERFRONT PROJECT
SANTA CRUZ, CA
HPA #16319

CONTEXT PERSPECTIVE VIEWS
10/18/19

SC RIVERFRONT

HUMPHREYS & **PARTNERS** ARCHITECTS, L.P.
5339 Alpha Rd., Suite 300, Dallas, TX 75240 | 972.701.9636 | www.humphreys.com

© 2019 by Humphreys & Partners Architects, L.P. The arrangements depicted herein are the sole property of Humphreys & Partners Architects, LP and may not be reproduced in any form without its written permission. Architectural conceptual site plans are for feasibility purpose only. Revisions may occur due to further investigation from regulatcry authorities and building code analysis. Dimensions shown are of a strategic intent only. Refer to surveys and civil drawings for technical information and measurements.

VIEW 6. LOOKING SOUTH WEST FROM SOQUEL AVE BRIDGE

VIEW 5. LOOKING SOUTH DOWN FRONT ST

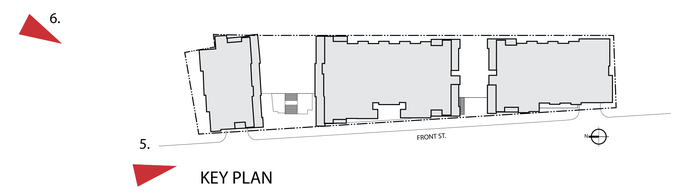

RIVERFRONT PROJECT
SANTA CRUZ, CA
HPA #16319

CONTEXT PERSPECTIVE VIEWS
10/18/19

SC RIVERFRONT

HUMPHREYS & **PARTNERS** ARCHITECTS, L.P.
5339 Alpha Rd., Suite 300, Dallas, TX 75240 | 972.701.9636 | www.humphreys.com

© 2019 by Humphreys & Partners Architects, L.P. The arrangements depicted herein are the sole property of Humphreys & Partners Architects, LP and may not be reproduced in any form without its written permission. Architectural conceptual site plans are for feasibility purpose only. Revisions may occur due to further investigation from regulatory authorities and building code analysis. Dimensions shown are of a strategic intent only. Refer to surveys and civil drawings for technical information and measurements.

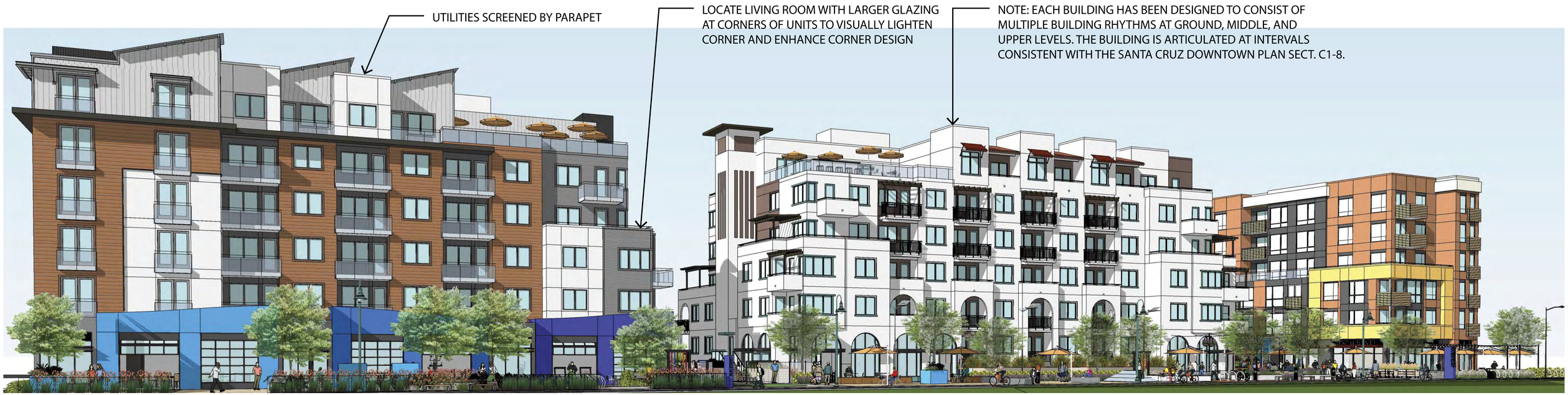

1. VIEW OF LEVEE (EAST) ELEVATION

2. VIEW OF NORTH ELEVATION FROM FRONT STREET (LOOKING SE)

3. VIEW OF NORTH ELEVATION FROM LEVEE (LOOKING SW)

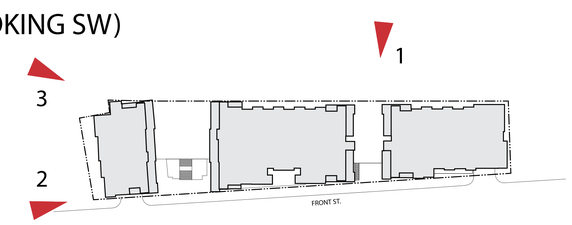

KEY PLAN

05

RIVERFRONT PROJECT
SANTA CRUZ, CA
HPA #16319

CONCEPT BUILDING ELEVATION VIEWS

10/18/19

SC RIVERFRONT

HUMPHREYS & **PARTNERS** ARCHITECTS, L.P.
5339 Alpha Rd., Suite 300, Dallas, TX 75240 | 972.701.9636 | www.humphreys.com

© 2019 by Humphreys & Partners Architects, L.P. The arrangements depicted herein are the sole property of Humphreys & Partners Architects, LP and may not be reproduced in any form without its written permission. Architectural conceptual site plans are for feasibility purpose only. Revisions may occur due to further investigation from regulatory authorities and building code analysis. Dimensions shown are of a strategic intent only. Refer to surveys and civil drawings for technical information and measurements.

4. VIEW OF FRONT STREET (WEST) ELEVATION

5. VIEW OF SOUTH ELEVATION FROM FRONT STREET (LOOKING NE)

6. VIEW OF SOUTH ELEVATION FROM LEVEE (LOOKING NW)

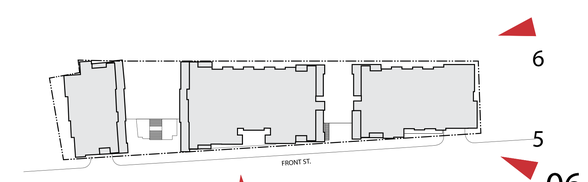

KEY PLAN 06

RIVERFRONT PROJECT
SANTA CRUZ, CA
HPA #16319

CONCEPT BUILDING ELEVATION VIEWS
10/18/19

SC RIVERFRONT

HUMPHREYS & PARTNERS ARCHITECTS, L.P.
5339 Alpha Rd., Suite 300, Dallas, TX 75240 | 972.701.9636 | www.humphreys.com

© 2019 by Humphreys & Partners Architects, L.P. The arrangements depicted herein are the sole property of Humphreys & Partners Architects, LP and may not be reproduced in any form without its written permission. Architectural conceptual site plans are for feasibility purpose only. Revisions may occur due to further investigation from regulatory authorities and building code analysis. Dimensions shown are of a strategic intent only. Refer to surveys and civil drawings for technical information and measurements.

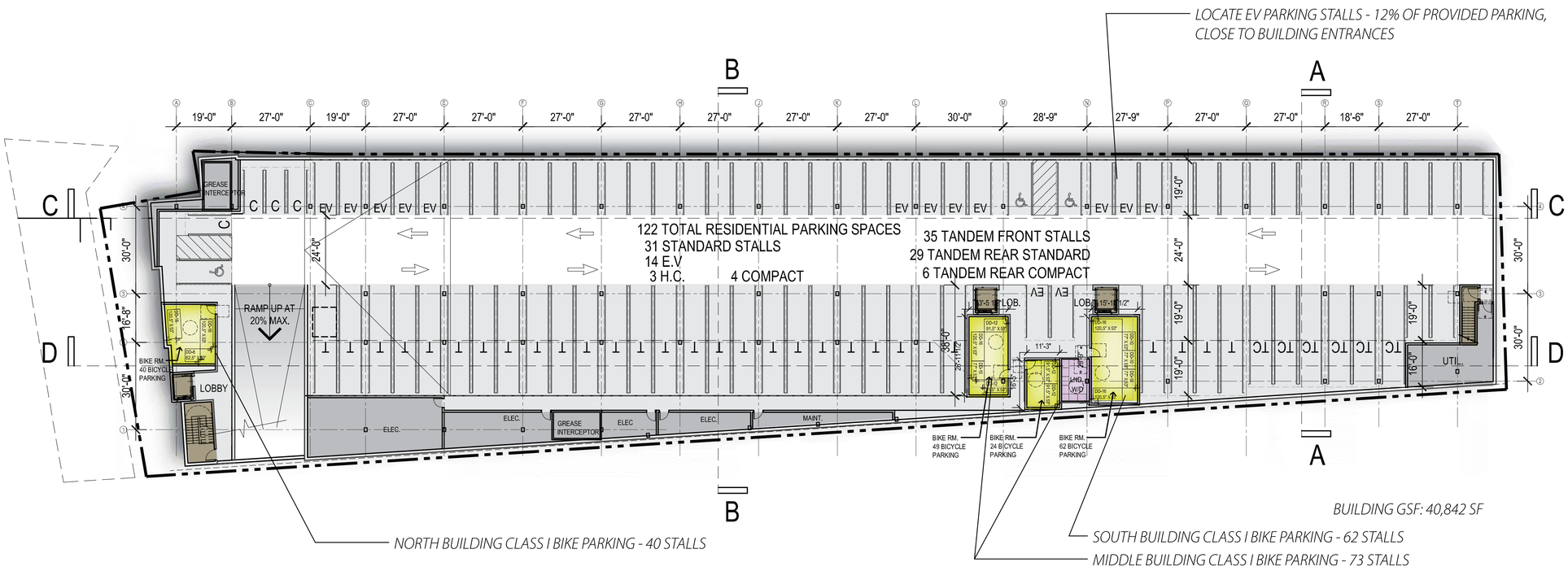

NOT TO SCALE @ 11x17
SCALE: 1" = 20' @ 24x36

N

0' 20' 40' 60'

07

RIVERFRONT PROJECT
SANTA CRUZ, CA
HPA #16319

SUB-T PLAN
10/18/19

SC RIVERFRONT

HUMPHREYS & PARTNERS ARCHITECTS, L.P.
5339 Alpha Rd., Suite 300, Dallas, TX 75240 | 972.701.9636 | www.humphreys.com

© 2019 by Humphreys & Partners Architects, L.P. The arrangements depicted herein are the sole property of Humphreys & Partners Architects, LP and may not be reproduced in any form without its written permission. Architectural conceptual site plans are for feasibility purpose only. Revisions may occur due to further investigation from regulatory authorities and building code analysis. Dimensions shown are of a strategic intent only. Refer to surveys and civil drawings for technical information and measurements.

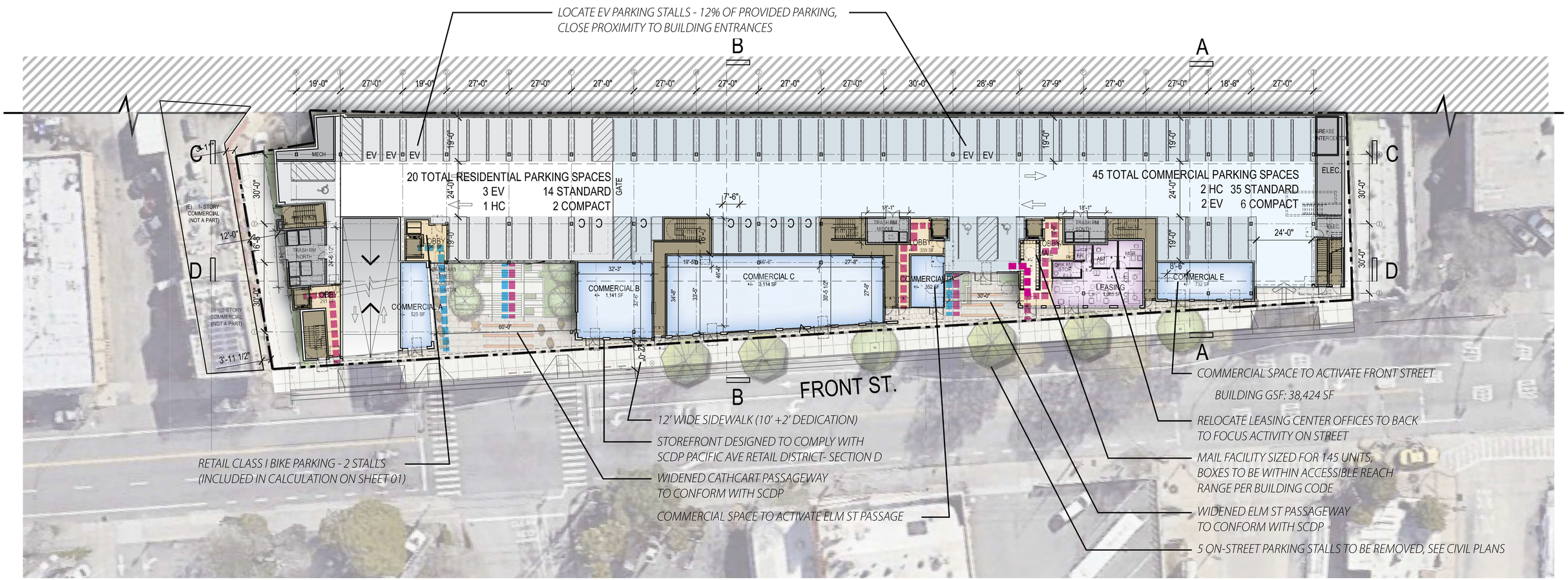

NOTE: FUTURE FOOD SERVICE FACILITY INFRASTRUCTURE TO BE APPROPRIATELY INCORPORATED INTO THE BUILDING DEIGN AND SCREENED FROM VIEW

PUBLIC AMENITY
RESIDENTIAL AMENITY
COMMERCIAL PATH OF TRAVEL
RESIDENTIAL PATH OF TRAVEL

NOT TO SCALE @ 11x17
SCALE: 1" = 20' @ 24x36

N 0' 20' 40' 60'

08

RIVERFRONT PROJECT
SANTA CRUZ, CA
HPA #16319

LEVEL 1- FRONT STREET LEVEL PLAN

10/18/19

SC RIVERFRONT

HUMPHREYS & PARTNERS ARCHITECTS, L.P.
5339 Alpha Rd., Suite 300, Dallas, TX 75240 | 972.701.9636 | www.humphreys.com

© 2019 by Humphreys & Partners Architects, L.P. The arrangements depicted herein are the sole property of Humphreys & Partners Architects, LP and may not be reproduced in any form without its written permission. Architectural conceptual site plans are for feasibility purpose only. Revisions may occur due to further investigation from regulatory authorities and building code analysis. Dimensions shown are of a strategic intent only. Refer to surveys and civil drawings for technical information and measurements.

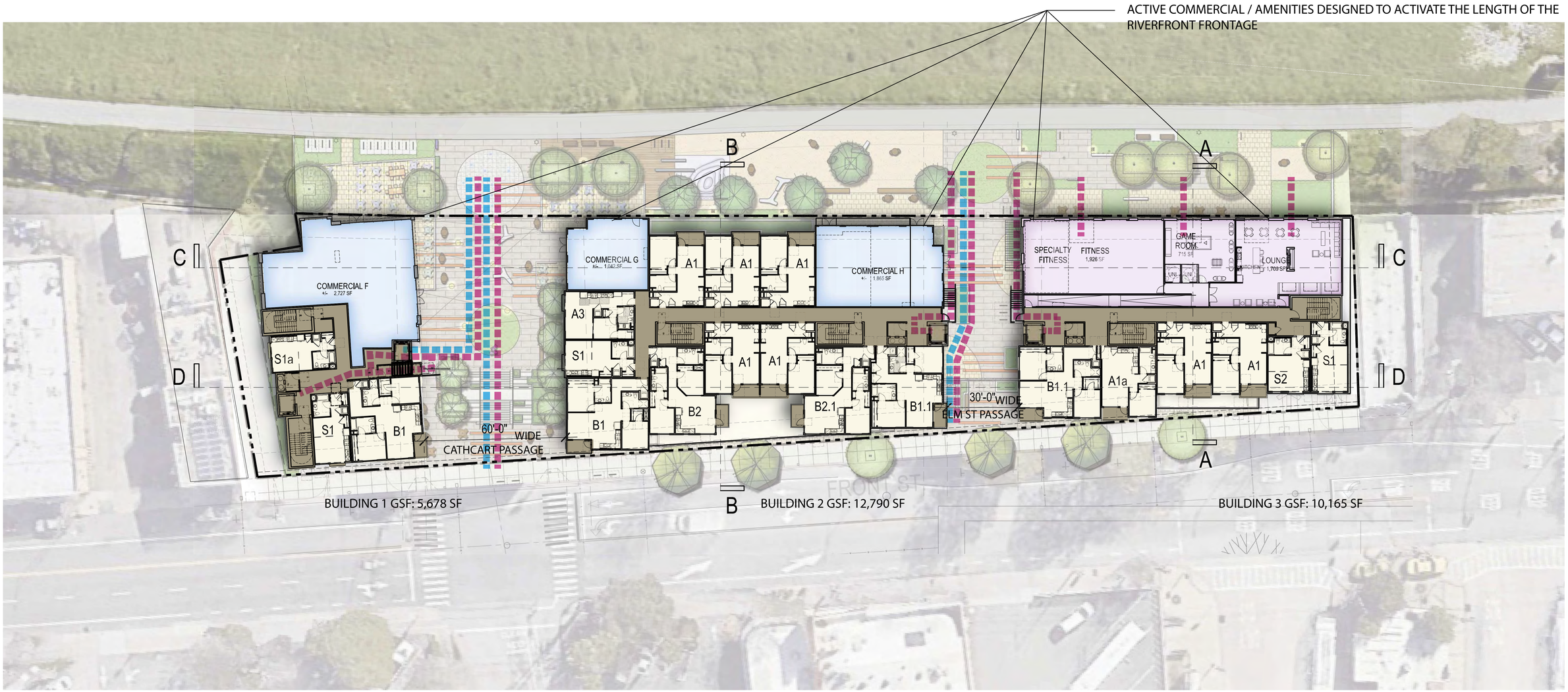

PUBLIC AMENITY
RESIDENTIAL AMENITY
COMMERCIAL PATH OF TRAVEL
RESIDENTIAL PATH OF TRAVEL

NOT TO SCALE @ 11x17
SCALE: 1" = 20' @ 24x36

N 0' 20' 40' 60'

09

RIVERFRONT PROJECT
SANTA CRUZ, CA
HPA #16319

LEVEL 2 - LEVEE PLAN

10/18/19

SC RIVERFRONT

HUMPHREYS & **PARTNERS** ARCHITECTS, L.P.
5339 Alpha Rd., Suite 300, Dallas, TX 75240 | 972.701.9636 | www.humphreys.com

© 2019 by Humphreys & Partners Architects, L.P. The arrangements depicted herein are the sole property of Humphreys & Partners Architects, LP and may not be reproduced in any form without its written permission. Architectural conceptual site plans are for feasibility purpose only. Revisions may occur due to further investigation from regulatory authorities and building code analysis. Dimensions shown are of a strategic intent only. Refer to surveys and civil drawings for technical information and measurements.

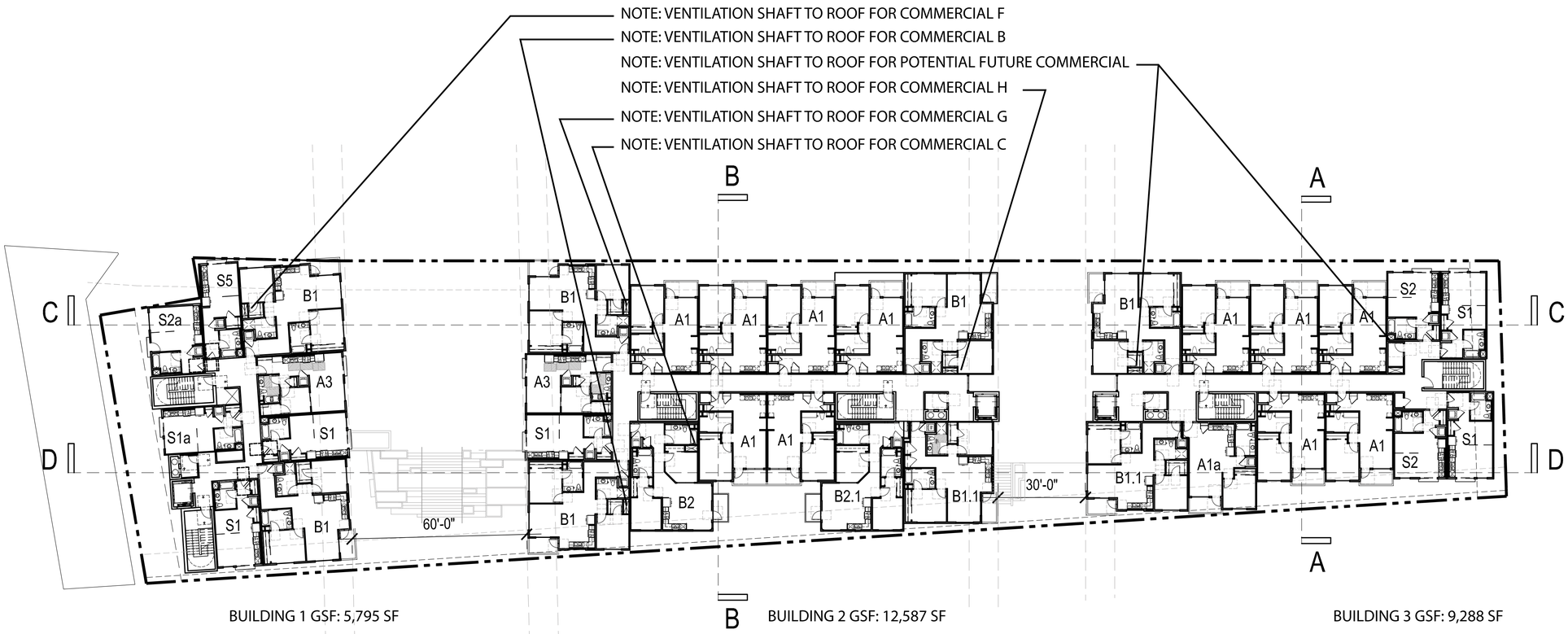

NOT TO SCALE @ 11x17
SCALE: 1" = 20' @ 24x36

N 0' 20' 40' 60'

10

RIVERFRONT PROJECT
SANTA CRUZ, CA
HPA #16319

LEVEL 3 PLAN
10/18/19

SC RIVERFRONT

HUMPHREYS & PARTNERS ARCHITECTS, L.P.
5339 Alpha Rd., Suite 300, Dallas, TX 75240 | 972.701.9636 | www.humphreys.com

© 2019 by Humphreys & Partners Architects, L.P. The arrangements depicted herein are the sole property of Humphreys & Partners Architects, LP and may not be reproduced in any form without its written permission. Architectural conceptual site plans are for feasibility purpose only. Revisions may occur due to further investigation from regulatory authorities and building code analysis. Dimensions shown are of a strategic intent only. Refer to surveys and civil drawings for technical information and measurements.

NOTE: ALONG THE WEST SIDE OF THE RIVERWALK, DEVELOPMENT SHALL STEP BACK 10' FROM THE EXTERIOR WALL FACE ABOVE THE 50' HEIGHT LEVEL AS MEASURED FROM FRONT STREET SIDEWALK. ALLOW UP TO 25% OF THE RIVERWALK FRONTAGE TO ENCROACH TO PROVIDE FOR MASSING VARIATION PER SCDP SECT. 4.E.1.d

NOTE: VENTILATION SHAFT TO ROOF FOR COMMERCIAL F

NOTE: VENTILATION SHAFT TO ROOF FOR COMMERCIAL B

NOTE: VENTILATION SHAFT TO ROOF FOR POTENTIAL FUTURE COMMERCIAL

NOTE: VENTILATION SHAFT TO ROOF FOR COMMERCIAL H

NOTE: VENTILATION SHAFT TO ROOF FOR COMMERCIAL G

NOTE: VENTILATION SHAFT TO ROOF FOR COMMERCIAL C

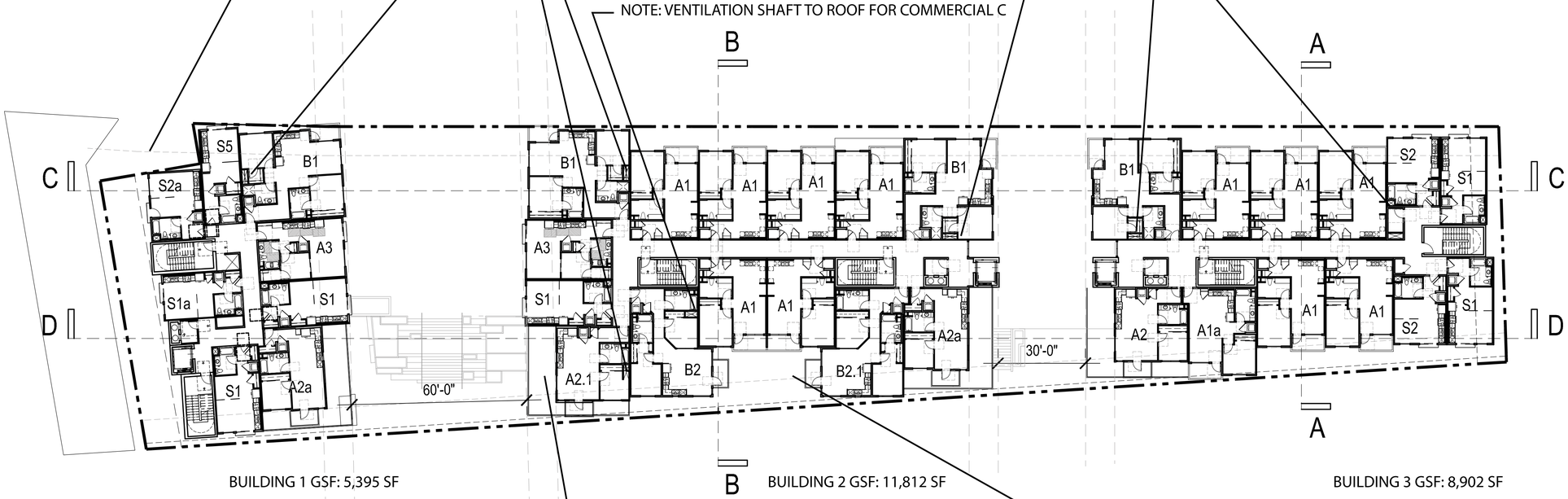

BUILDING 1 GSF: 5,395 SF

BUILDING 2 GSF: 11,812 SF

BUILDING 3 GSF: 8,902 SF

NOTE: AT LEAST 50% OF BUILDING FRONTAGE ALONG FRONT STREET SHALL STEP BACK 10' ABOVE THE HEIGHT OF 50' PER SCDP 4.3.1.c

NOTE: BUILDINGS ADJACENT TO PUBLICLY ACCESSIBLE PASSAGEWAYS SHALL STEP BACK AT LEAST 10' FROM THE STREET FOR ANY HEIGHT ABOVE 35' PER SCDP SECT. 4.E.1.c

NOT TO SCALE @ 11x17
SCALE: 1" = 20' @ 24x36

N 0' 20' 40' 60'

11

RIVERFRONT PROJECT
SANTA CRUZ, CA
HPA #16319

LEVEL 4 PLAN
10/18/19

SC RIVERFRONT

HUMPHREYS & PARTNERS ARCHITECTS, L.P.
5339 Alpha Rd., Suite 300, Dallas, TX 75240 | 972.701.9636 | www.humphreys.com

© 2019 by Humphreys & Partners Architects, L.P. The arrangements depicted herein are the sole property of Humphreys & Partners Architects, LP and may not be reproduced in any form without its written permission. Architectural conceptual site plans are for feasibility purpose only. Revisions may occur due to further investigation from regulatory authorities and building code analysis. Dimensions shown are of a strategic intent only. Refer to surveys and civil drawings for technical information and measurements.

NOTE: ALONG THE WEST SIDE OF THE RIVERWALK, DEVELOPMENT SHALL STEP BACK 10' FROM THE EXTERIOR WALL FACE ABOVE THE 50' HEIGHT LEVEL AS MEASURED FROM FRONT STREET SIDEWALK. ALLOW UP TO 25% OF THE RIVERWALK FRONTAGE TO ENCROACH TO PROVIDE FOR MASSING VARIATION PER SCDP SECT. 4.E.1.d

NOTE: VENTILATION SHAFT TO ROOF FOR COMMERCIAL F

NOTE: VENTILATION SHAFT TO ROOF FOR COMMERCIAL B

NOTE: VENTILATION SHAFT TO ROOF FOR POTENTIAL FUTURE COMMERCIAL

NOTE: VENTILATION SHAFT TO ROOF FOR COMMERCIAL H

NOTE: VENTILATION SHAFT TO ROOF FOR COMMERCIAL G

NOTE: VENTILATION SHAFT TO ROOF FOR COMMERCIAL C

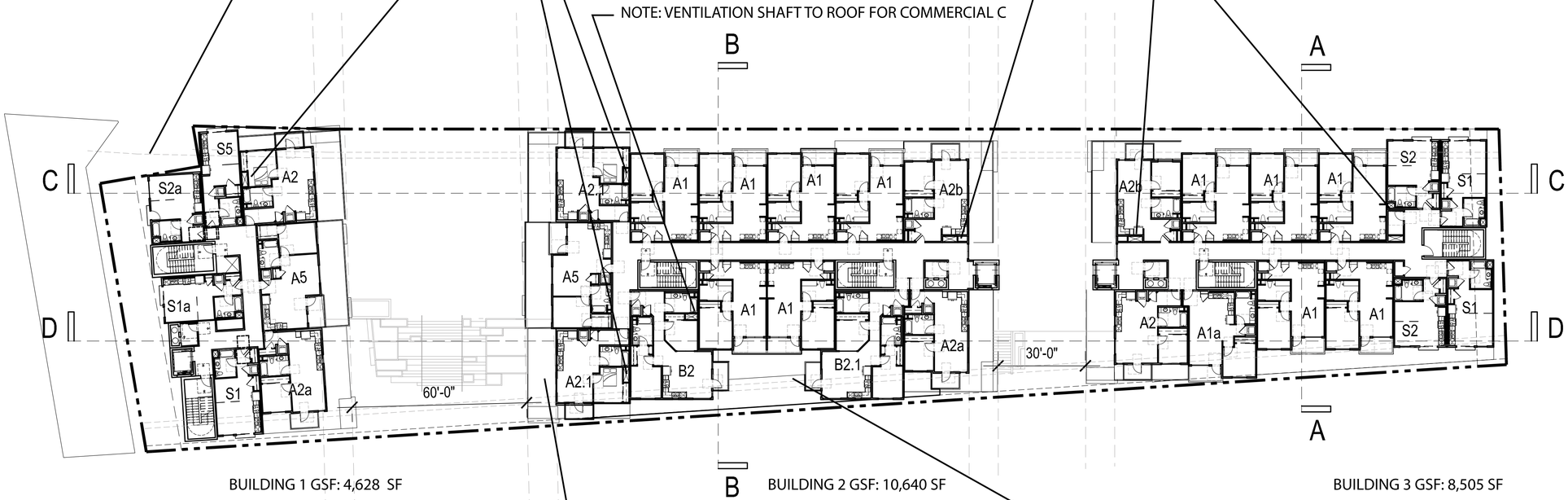

BUILDING 1 GSF: 4,628 SF

BUILDING 2 GSF: 10,640 SF

BUILDING 3 GSF: 8,505 SF

NOTE: AT LEAST 50% OF BUILDING FRONTAGE ALONG FRONT STREET SHALL STEP BACK 10' ABOVE THE HEIGHT OF 50' PER SCDP 4.3.1.c

NOTE: BUILDINGS ADJACENT TO PUBLICLY ACCESSIBLE PASSAGEWAYS SHALL STEP BACK AT LEAST 10' FROM THE STREET FOR ANY HEIGHT ABOVE 35' PER SCDP SECT. 4.E.1.c

NOT TO SCALE @ 11x17
SCALE: 1" = 20' @ 24x36

N

0' 20' 40' 60'

12

RIVERFRONT PROJECT
SANTA CRUZ, CA
HPA #16319

LEVEL 5 PLAN
10/18/19

SC RIVERFRONT

HUMPHREYS & **PARTNERS** ARCHITECTS, L.P.
5339 Alpha Rd., Suite 300, Dallas, TX 75240 | 972.701.9636 | www.humphreys.com

© 2019 by Humphreys & Partners Architects, L.P. The arrangements depicted herein are the sole property of Humphreys & Partners Architects, LP and may not be reproduced in any form without its written permission. Architectural conceptual site plans are for feasibility purpose only. Revisions may occur due to further investigation from regulatory authorities and building code analysis. Dimensions shown are of a strategic intent only. Refer to surveys and civil drawings for technical information and measurements.

NOTE: ALONG THE WEST SIDE OF THE RIVERWALK, DEVELOPMENT SHALL STEP BACK 10' FROM THE EXTERIOR WALL FACE ABOVE THE 50' HEIGHT LEVEL AS MEASURED FROM FRONT STREET SIDEWALK. ALLOW UP TO 25% OF THE RIVERWALK FRONTAGE TO ENCROACH TO PROVIDE FOR MASSING VARIATION PER SCDP SECT. 4.E.1.d

NOTE: VENTILATION SHAFT TO ROOF FOR COMMERCIAL F

NOTE: VENTILATION SHAFT TO ROOF FOR COMMERCIAL B

NOTE: VENTILATION SHAFT TO ROOF FOR POTENTIAL FUTURE COMMERCIAL

NOTE: VENTILATION SHAFT TO ROOF FOR COMMERCIAL H

NOTE: VENTILATION SHAFT TO ROOF FOR COMMERCIAL G

NOTE: VENTILATION SHAFT TO ROOF FOR COMMERCIAL C

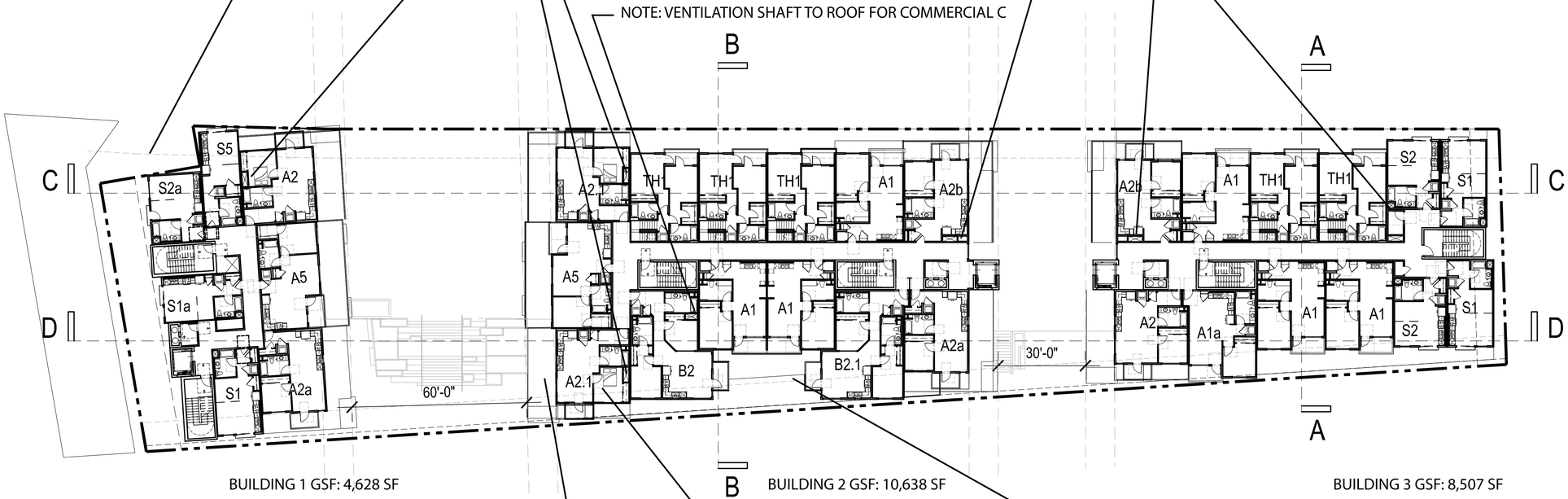

BUILDING 1 GSF: 4,628 SF

BUILDING 2 GSF: 10,638 SF

BUILDING 3 GSF: 8,507 SF

NOTE: AT LEAST 50% OF BUILDING FRONTAGE ALONG FRONT STREET SHALL STEP BACK 10' ABOVE THE HEIGHT OF 50' PER SCDP 4.3.1.c

NOTE: TOP FLOOR REVISED TO BE 98.3% OF FLOOR BELOW (LEVEL 5)

NOTE: BUILDINGS ADJACENT TO PUBLICLY ACCESSIBLE PASSAGEWAYS SHALL STEP BACK AT LEAST 10' FROM THE STREET FOR ANY HEIGHT ABOVE 35' PER SCDP SECT. 4.E.1.c

NOT TO SCALE @ 11x17
SCALE: 1" = 20' @ 24x36

N 0' 20' 40' 60'

RIVERFRONT PROJECT
SANTA CRUZ, CA
HPA #16319

LEVEL 6 PLAN
10/18/19

SC RIVERFRONT

HUMPHREYS & **PARTNERS** ARCHITECTS, L.P.
5339 Alpha Rd., Suite 300, Dallas, TX 75240 | 972.701.9636 | www.humphreys.com

© 2019 by Humphreys & Partners Architects, L.P. The arrangements depicted herein are the sole property of Humphreys & Partners Architects, LP and may not be reproduced in any form without its written permission. Architectural conceptual site plans are for feasibility purpose only. Revisions may occur due to further investigation from regulatory authorities and building code analysis. Dimensions shown are of a strategic intent only. Refer to surveys and civil drawings for technical information and measurements.

NOTE: ALONG THE WEST SIDE OF THE RIVERWALK, DEVELOPMENT SHALL STEP BACK 10' FROM THE EXTERIOR WALL FACE ABOVE THE 50' HEIGHT LEVEL AS MEASURED FROM FRONT STREET SIDEWALK. ALLOW UP TO 25% OF THE RIVERWALK FRONTAGE TO ENCROACH TO PROVIDE FOR MASSING VARIATION PER SCDP SECT. 4.E.1.d

NOTE: VENTILATION SHAFT TO ROOF FOR COMMERCIAL F

NOTE: VENTILATION SHAFT TO ROOF FOR COMMERCIAL B

NOTE: VENTILATION SHAFT TO ROOF FOR POTENTIAL FUTURE COMMERCIAL

NOTE: VENTILATION SHAFT TO ROOF FOR COMMERCIAL H

NOTE: VENTILATION SHAFT TO ROOF FOR COMMERCIAL G

NOTE: VENTILATION SHAFT TO ROOF FOR COMMERCIAL C

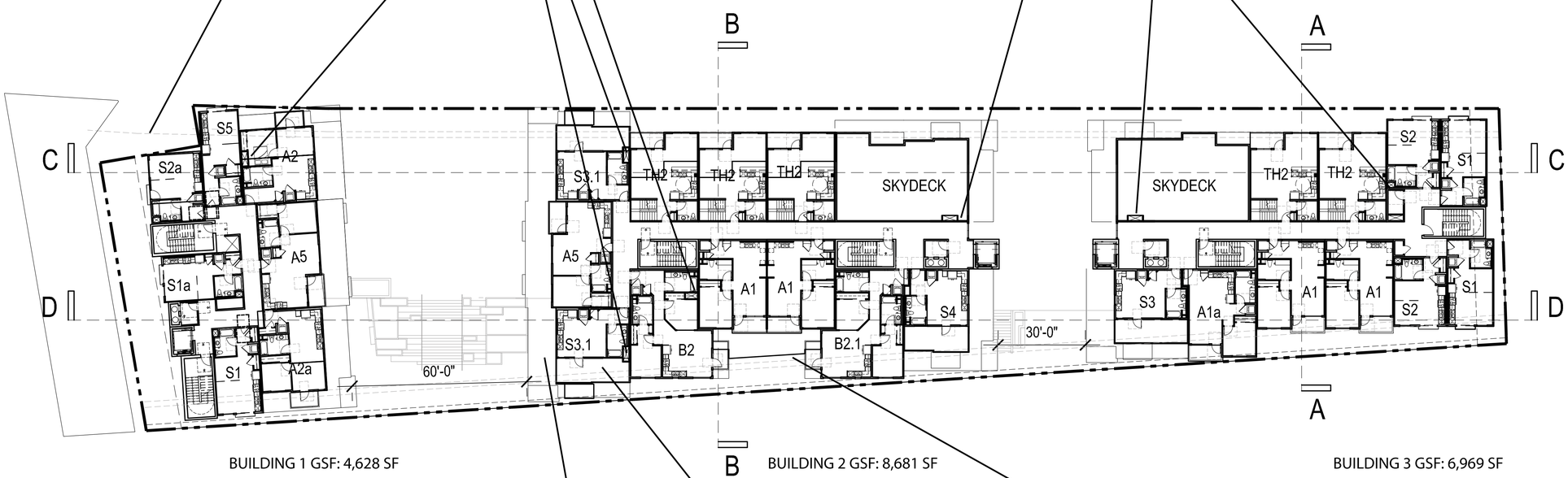

BUILDING 1 GSF: 4,628 SF

BUILDING 2 GSF: 8,681 SF

BUILDING 3 GSF: 6,969 SF

NOTE: AT LEAST 50% OF BUILDING FRONTAGE ALONG FRONT STREET SHALL STEP BACK 10' ABOVE THE HEIGHT OF 50' PER SCDP 4.3.1.c

NOTE: TOP FLOOR REVISED TO BE 98.3% OF FLOOR BELOW (LEVEL 5)

NOTE: BUILDINGS ADJACENT TO PUBLICLY ACCESSIBLE PASSAGEWAYS SHALL STEP BACK AT LEAST 10' FROM THE STREET FOR ANY HEIGHT ABOVE 35' PER SCDP SECT. 4.E.1.c

NOT TO SCALE @ 11x17
SCALE: 1" = 20' @ 24x36

N

0' 20' 40' 60'

RIVERFRONT PROJECT
SANTA CRUZ, CA
HPA #16319

LEVEL 7 PLAN
10/18/19

SC RIVERFRONT

HUMPHREYS & **PARTNERS** ARCHITECTS, L.P.
5339 Alpha Rd., Suite 300, Dallas, TX 75240 | 972.701.9636 | www.humphreys.com

© 2019 by Humphreys & Partners Architects, L.P. The arrangements depicted herein are the sole property of Humphreys & Partners Architects, LP and may not be reproduced in any form without its written permission. Architectural conceptual site plans are for feasibility purpose only. Revisions may occur due to further investigation from regulatory authorities and building code analysis. Dimensions shown are of a strategic intent only. Refer to surveys and civil drawings for technical information and measurements.

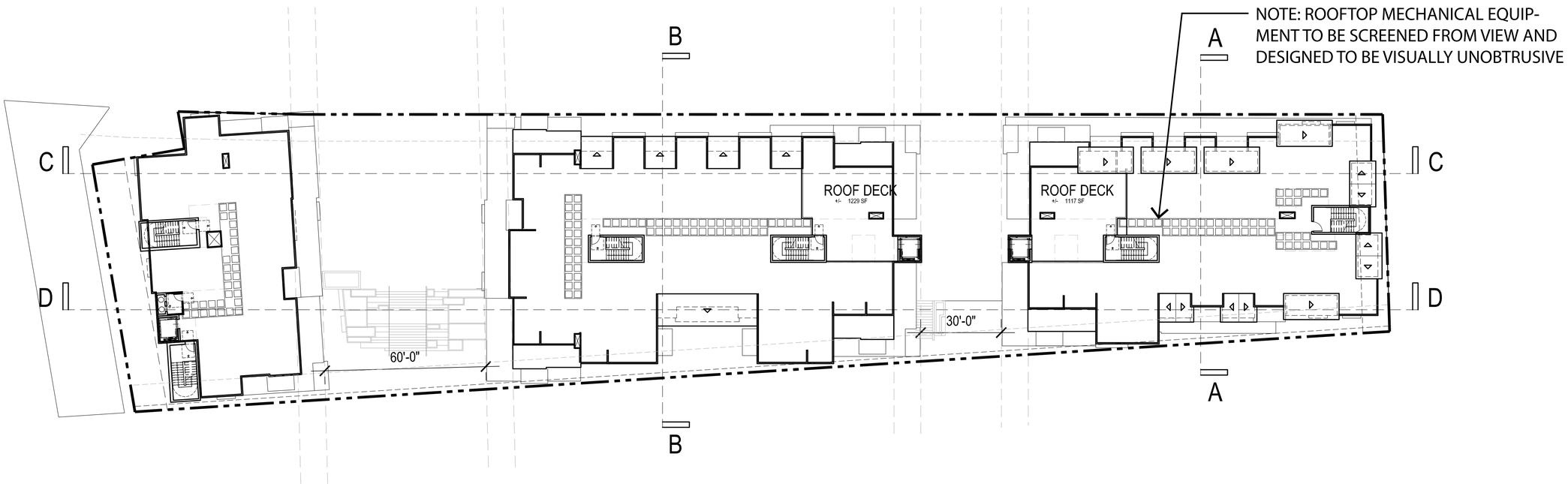

NOT TO SCALE @ 11x17
SCALE: 1" = 20' @ 24x36

N 0' 20' 40' 60'

RIVERFRONT PROJECT
SANTA CRUZ, CA
HPA #16319

ROOF PLAN
10/18/19

SC RIVERFRONT

HUMPHREYS & PARTNERS ARCHITECTS, L.P.
5339 Alpha Rd., Suite 300, Dallas, TX 75240 | 972.701.9636 | www.humphreys.com

© 2019 by Humphreys & Partners Architects, L.P. The arrangements depicted herein are the sole property of Humphreys & Partners Architects, LP and may not be reproduced in any form without its written permission. Architectural conceptual site plans are for feasibility purpose only. Revisions may occur due to further investigation from regulatory authorities and building code analysis. Dimensions shown are of a strategic intent only. Refer to surveys and civil drawings for technical information and measurements.

NOTE: AT LEAST 50% OF BUILDING FRONTAGE ALONG FRONT STREET SHALL STEP BACK 10' ABOVE THE HEIGHT OF 50' PER SCDP 4.3.1.c

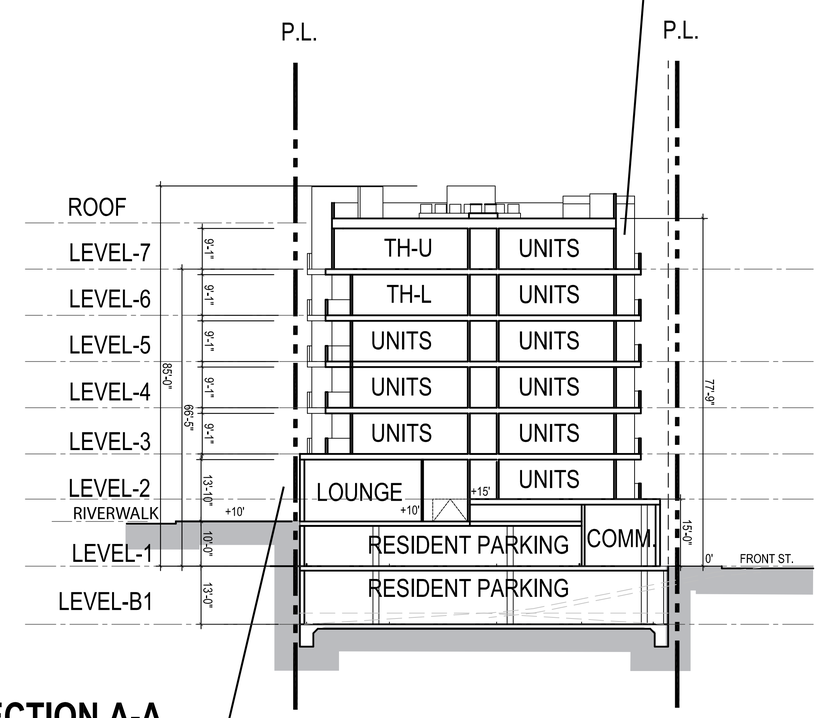

SECTION A-A

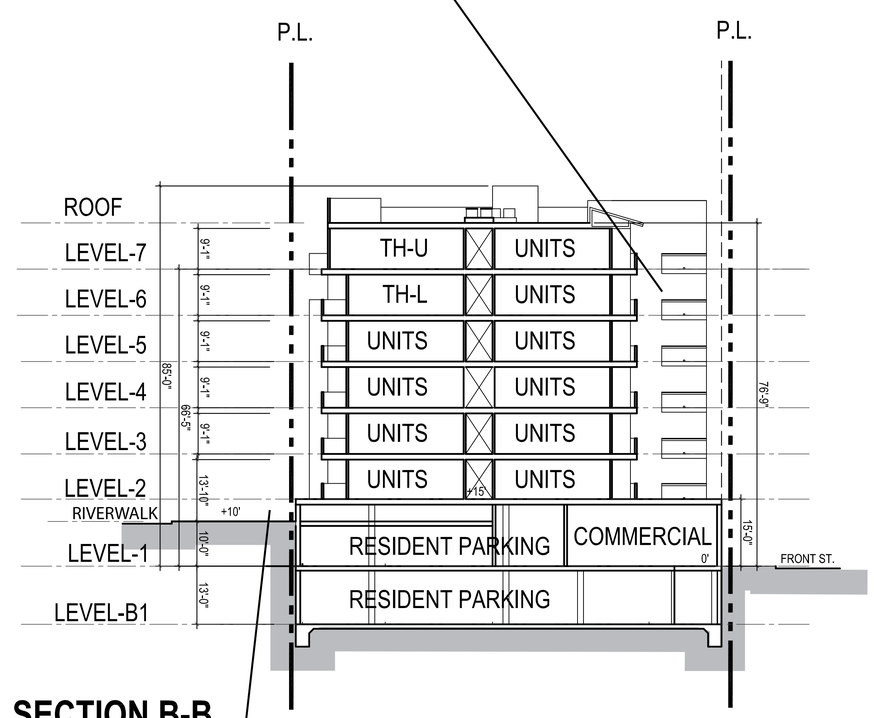

SECTION B-B

NOTE: ALONG THE WEST SIDE OF THE RIVERWALK, DEVELOPMENT SHALL STEP BACK 10' FROM THE EXTERIOR WALL FACE ABOVE THE 50' HEIGHT LEVEL AS MEASURED FROM FRONT STREET SIDEWALK. ALLOW UP TO 25% OF THE RIVERWALK FRONTAGE TO ENCROACH TO PROVIDE FOR MASSING VARIATION PER SCDP SECT. 4.E.1.d

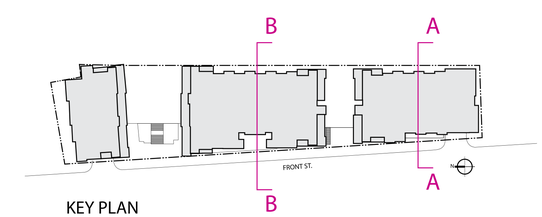

KEY PLAN

NOT TO SCALE @ 11x17
SCALE: 1" = 16' @ 24x36

0' 16' 32' 48'

RIVERFRONT PROJECT
SANTA CRUZ, CA
HPA #16319

BUILDING SECTIONS
10/18/19

SC RIVERFRONT

HUMPHREYS & **PARTNERS** ARCHITECTS, L.P.
5339 Alpha Rd., Suite 300, Dallas, TX 75240 | 972.701.9636 | www.humphreys.com

© 2019 by Humphreys & Partners Architects, L.P. The arrangements depicted herein are the sole property of Humphreys & Partners Architects, LP and may not be reproduced in any form without its written permission. Architectural conceptual site plans are for feasibility purpose only. Revisions may occur due to further investigation from regulatory authorities and building code analysis. Dimensions shown are of a strategic intent only. Refer to surveys and civil drawings for technical information and measurements.

NOTE: BUILDINGS ADJACENT TO PUBLICLY ACCESSIBLE PASSAGEWAYS SHALL STEP BACK AT LEAST 10′ FROM THE STREET FOR ANY HEIGHT ABOVE 35′ PER SCDP SECT. 4.E.1.c

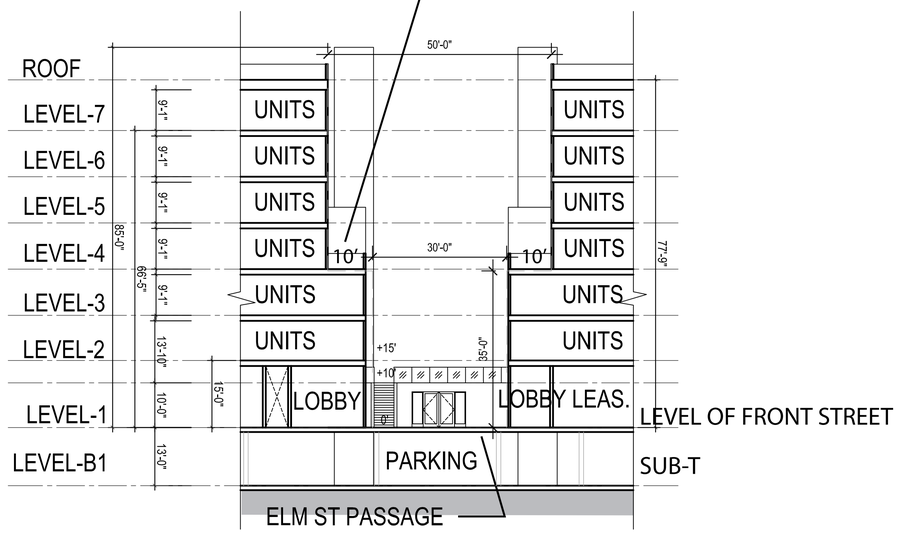

SECTION C-C

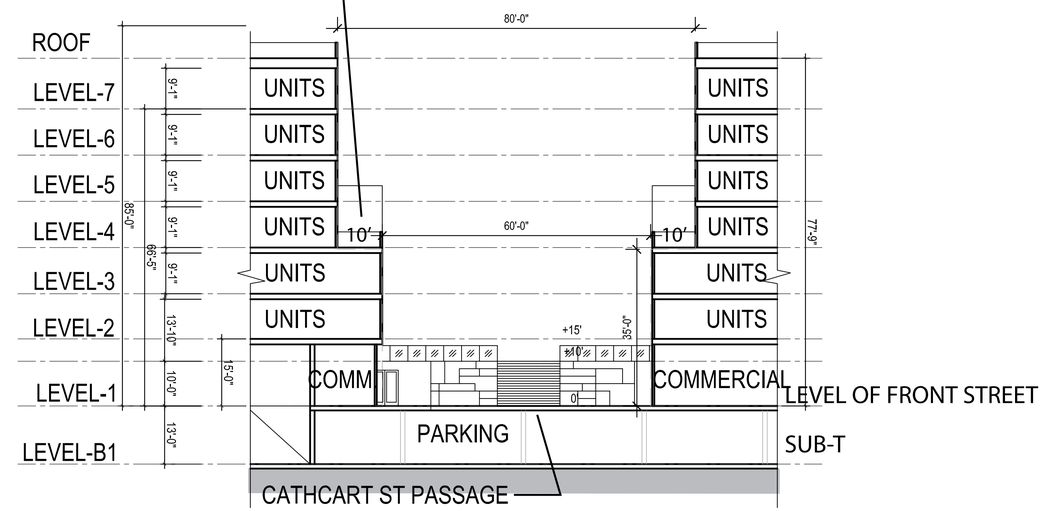

SECTION D-D

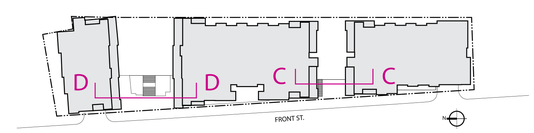

KEY PLAN

NOT TO SCALE @ 11x17
SCALE: 1″ = 16′ @ 24x36

0′ 16′ 32′ 48′

RIVERFRONT PROJECT
SANTA CRUZ, CA
HPA #16319

BUILDING SECTIONS
10/18/19

SC RIVERFRONT

HUMPHREYS & PARTNERS ARCHITECTS, L.P.
5339 Alpha Rd., Suite 300, Dallas, TX 75240 | 972.701.9636 | www.humphreys.com

© 2019 by Humphreys & Partners Architects, L.P. The arrangements depicted herein are the sole property of Humphreys & Partners Architects, LP and may not be reproduced in any form without its written permission. Architectural conceptual site plans are for feasibility purpose only. Revisions may occur due to further investigation from regulatory authorities and building code analysis. Dimensions shown are of a strategic intent only. Refer to surveys and civil drawings for technical information and measurements.

1. WEST (FRONT ST.) ELEVATION

NOTE: EACH BUILDING HAS BEEN DESIGNED TO CONSIST OF MULTIPLE BUILDING RHYTHMS AT GROUND, MIDDLE, AND UPPER LEVELS. THE BUILDING IS ARTICULATED AT INTERVALS CONSISTENT WITH THE SANTA CRUZ DOWNTOWN PLAN SECT. C1-8.

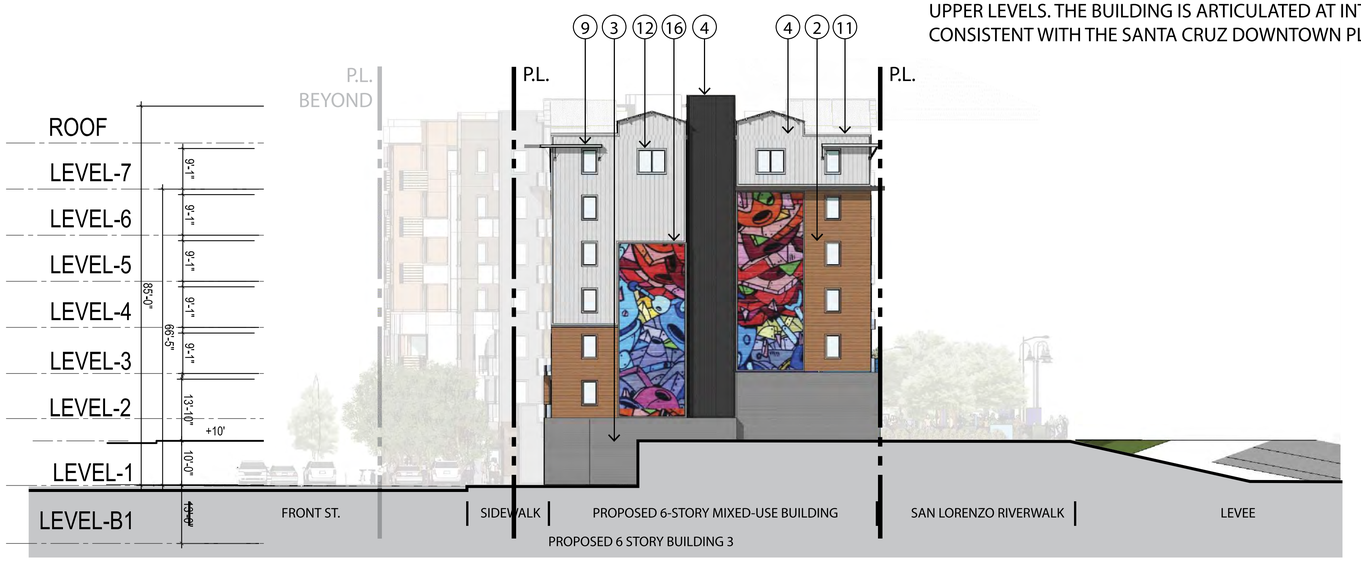

2. SOUTH ELEVATION

NOTE: EACH BUILDING HAS BEEN DESIGNED TO CONSIST OF MULTIPLE BUILDING RHYTHMS AT GROUND, MIDDLE, AND UPPER LEVELS. THE BUILDING IS ARTICULATED AT INTERVALS CONSISTENT WITH THE SANTA CRUZ DOWNTOWN PLAN SECT. C1-8.

MATERIAL LEGEND
1. EXTERIOR PLASTER, SAND FINISH
2. HORIZONTAL CEMENTITIOUS SIDING, SMOOTH
3. HORIZONTAL METAL SIDING, RIBBED CHANNEL
4. VERTICAL METAL SIDING, STANDING SEAM
5. THIN BRICK VENEER
6. HORIZONTAL CEMENTITOUS WOOD RAILING
7. PAINTED TUBE STEEL RAILING, GLASS PANEL INSERT
8. PAINTED TUBE STEEL RAILING
9. PAINTED METAL AWNING
10. PAINTED METAL TRELLIS
11. PAINTED CAP/ TRIM, PLASTER OVER EPS
12. VINYL WINDOWS
13. ALUMINUM STOREFRONT
14. ROLL UP GARAGE DOOR, GLASS PANEL
15. CONCRETE ROOF TILE
16. POTENTIAL MURAL LOCATION, DESIGN TO BE DEVELOPED
17. PERFORATED ALUMINUM RAILING

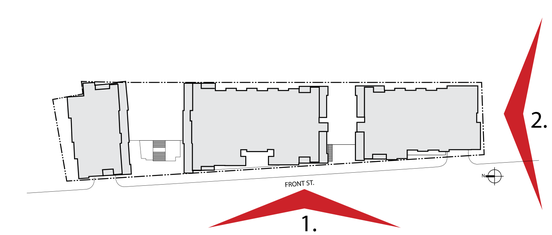

NOT TO SCALE @ 11x17
SCALE: 1" = 16' @ 24x36
0' 16' 32' 48'

RIVERFRONT PROJECT
SANTA CRUZ, CA
HPA #16319

CONCEPT ELEVATIONS
10/18/19

SC RIVERFRONT

HUMPHREYS & PARTNERS ARCHITECTS, L.P.
5339 Alpha Rd., Suite 300, Dallas, TX 75240 | 972.701.9636 | www.humphreys.com

© 2019 by Humphreys & Partners Architects, L.P. The arrangements depicted herein are the sole property of Humphreys & Partners Architects, LP and may not be reproduced in any form without its written permission. Architectural conceptual site plans are for feasibility purpose only. Revisions may occur due to further investigation from regulatory authorities and building code analysis. Dimensions shown are of a strategic intent only. Refer to surveys and civil drawings for technical information and measurements.

3. EAST (RIVERWALK) ELEVATION

NOTE: EACH BUILDING HAS BEEN DESIGNED TO CONSIST OF MULTIPLE BUILDING RHYTHMS AT GROUND, MIDDLE, AND UPPER LEVELS. THE BUILDING IS ARTICULATED AT INTERVALS CONSISTENT WITH THE SANTA CRUZ DOWNTOWN PLAN SECT. C1-8.

NOTE: STOREFRONT REVISED TO 10' TO REFLECT TALLER CEILING HEIGHT ON LEVEE-FACING COMMERCIAL

NOTE: Poject will incorporate bird-safe strategies consistent with those enumerated in the Downtown Specific Plan, including:

- *Excessive glazing has been avoided.*
- *The mid-block passageways provide opportunities for safe wildlife transit through the site.*
- *Project avoids passageways or atrium that trap birds.*
- *Project proposes using window glazing treatments that create a visual barrier to birds for the majority of glazing within the first 40' of ground level façade facing the Riverwalk.*
- *Exterior illumination will be thoughtfully designed to minimize light pollution*
- *Use of timers and avoiding up-lighting and spotlights and that would be detrimental to wildlife.*
- *Majority of landscaping located to allow views from the building / designed to keep birds away from the building's façade*

MATERIAL LEGEND

1. EXTERIOR PLASTER, SAND FINISH
2. HORIZONTAL CEMENTITIOUS SIDING, SMOOTH
3. HORIZONTAL METAL SIDING, RIBBED CHANNEL
4. VERTICAL METAL SIDING, STANDING SEAM
5. THIN BRICK VENEER
6. HORIZONTAL CEMENTITOUS WOOD RAILING
7. PAINTED TUBE STEEL RAILING, GLASS PANEL INSERT
8. PAINTED TUBE STEEL RAILING
9. PAINTED METAL AWNING
10. PAINTED METAL TRELLIS
11. PAINTED CAP/ TRIM, PLASTER OVER EPS
12. VINYL WINDOWS
13. ALUMINUM STOREFRONT
14. ROLL UP GARAGE DOOR, GLASS PANEL
15. CONCRETE ROOF TILE
16. POTENTIAL MURAL LOCATION, DESIGN TO BE DEVELOPED
17. PERFORATED ALUMINUM RAILING

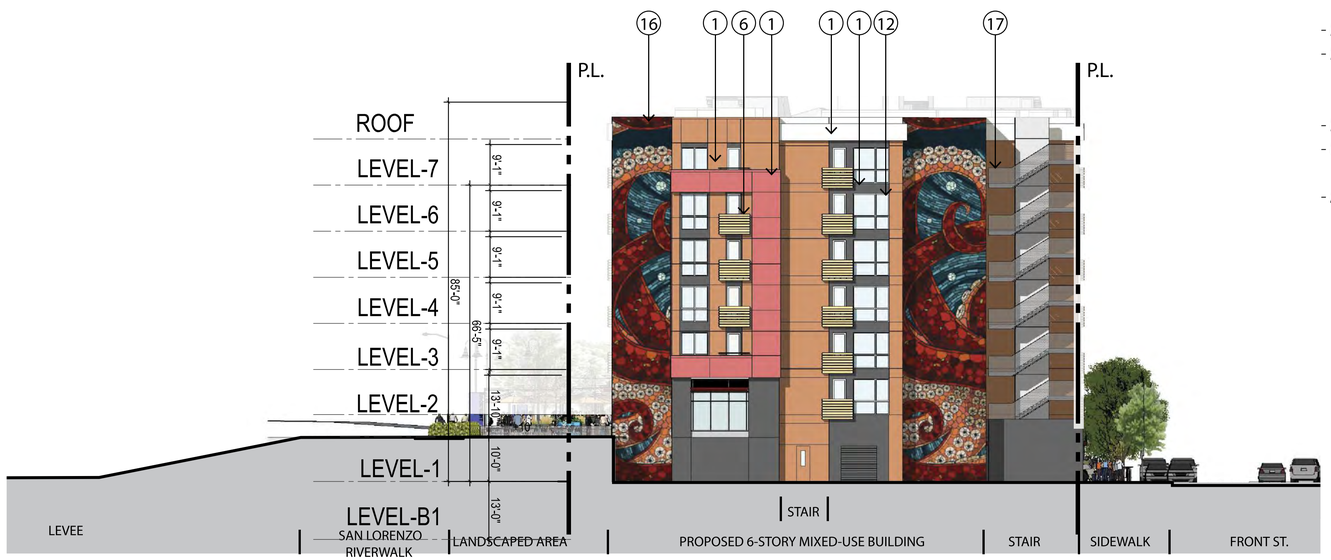

4. NORTH ELEVATION

NOTE: EACH BUILDING HAS BEEN DESIGNED TO CONSIST OF MULTIPLE BUILDING RHYTHMS AT GROUND, MIDDLE, AND UPPER LEVELS. THE BUILDING IS ARTICULATED AT INTERVALS CONSISTENT WITH THE SANTA CRUZ DOWNTOWN PLAN SECT. C1-8.

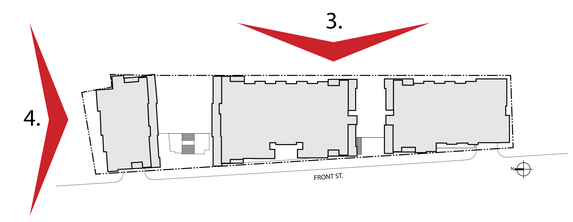

NOT TO SCALE @ 11x17
SCALE: 1" = 16' @ 24x36

0' 16 32' 48'

RIVERFRONT PROJECT
SANTA CRUZ, CA
HPA #16319

CONCEPT ELEVATIONS
10/18/19

SC RIVERFRONT

HUMPHREYS & PARTNERS ARCHITECTS, L.P.
5339 Alpha Rd., Suite 300, Dallas, TX 75240 | 972.701.9636 | www.humphreys.com

© 2019 by Humphreys & Partners Architects, L.P. The arrangements depicted herein are the sole property of Humphreys & Partners Architects, LP and may not be reproduced in any form without its written permission. Architectural conceptual site plans are for feasibility purpose only. Revisions may occur due to further investigation from regulatory authorities and building code analysis. Dimensions shown are of a strategic intent only. Refer to surveys and civil drawings for technical information and measurements.

NUMBERS DENOTE MATERIALS

ALL MATERIALS AS SHOWN OR APPROVED EQUAL

1. EXTERIOR PLASTER SAND FINISH

2. HORIZONTAL CEMENT FIBER SIDING, SMOOTH FINISH

3. VERTICAL METAL SIDING, RIBBED CHANNEL

4 VERTICAL METAL SIDING, STANDING SEAM

5. THIN BRICK VENEER

6. HORIZONTAL FIBER RAILING, WOOD FINISH COLOR: JAVA BY RESYSTA

7. PAINTER TUBE STEEL RAILING, GLASS PANEL INSERT

8. PAINTED TUBE STEEL RAILING

9. PAINTED METAL AWNING

10. PAINTED METAL TRELLIS

11. PAINTED CAP WITH TRIM, PLASTER OVER EPS

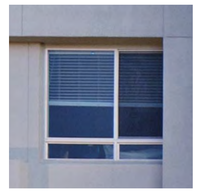

12. VINYL WINDOWS COLOR: WHITE

13. ALUMINUM STOREFRONT COLOR: CLEAR ANODIZED

14. ROLL UP GARAGE DOOR, GLASS PANEL INSERT, COLOR: BLACK

15. CONCRETE 'S' TILE CAPISTRANO BLEND COLOR: CALIENTE BY EAGLE ROOFING

17. PERFORATED ALUMINUM RAILING

LETTERS DENOTE COLORS

ALL MATERIALS AS SHOWN OR APPROVED EQUAL

A. DUNN EDWARDS DEW380 WHITE

B. DUNN EDWARDS DET466 MONARCH MIGRATION

C. DUNN EDWARDS DE6369 LEGENDARY GREY

D. DUNN EDWARDS DE6359 SILVER SETTING

E. DUNN EDWARDS DE6322 BLACK LEAD

F. DUNN EDWARDS DE6055 WILD WEST

G. DUNN EDWARDS DET453 VERANDA

H. DUNN EDWARDS DET426 FIERY CORAL

J. DUNN EDWARDS DE5347 GOLDEN NECTAR

K. DUNN EDWARDS DE5836 SAIL AWAY

L. DUNN EDWARDS DE5845 AMERICANA

M. DUNN EDWARDS DEA137 DEEP SAPPHIRE

N. ATAS #62 CHARCOAL GREY

P. ATAS #28 SILVERSMITH

Q. ATAS #02 BLACK

R. MEDIUM IRONSPOT #77 BY ENDICOTT

S. LIGHT GREY BLEND BY ENDICOTT

WEST (FRONT STREET) ELEVATION

EAST (RIVERWALK) ELEVATION

NUMBERS DENOTE MATERIALS, LETTERS DENOTE COLORS

RIVERFRONT PROJECT
SANTA CRUZ, CA
HPA #16319

CONCEPT DETAILS AND MATERIALS
10/18/19

SC RIVERFRONT

HUMPHREYS & PARTNERS ARCHITECTS, L.P.
5339 Alpha Rd., Suite 300, Dallas, TX 75240 | 972.701.9636 | www.humphreys.com

© 2019 by Humphreys & Partners Architects, L.P. The arrangements depicted herein are the sole property of Humphreys & Partners Architects, LP and may not be reproduced in any form without its written permission. Architectural conceptual site plans are for feasibility purpose only. Revisions may occur due to further investigation from regulatory authorities and building code analysis. Dimensions shown are of a strategic intent only. Refer to surveys and civil drawings for technical information and measurements.

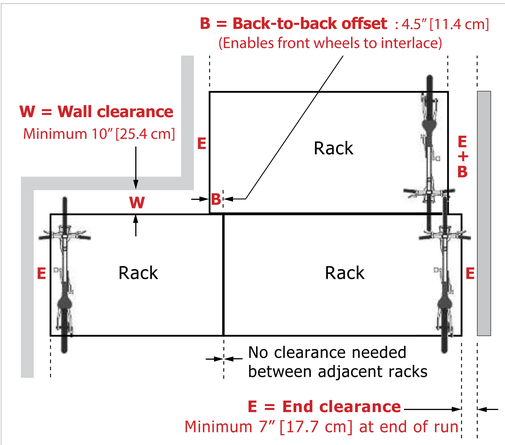

DOUBLE DECKER BIKE PARKING
CLEARANCES - PLAN VIEW

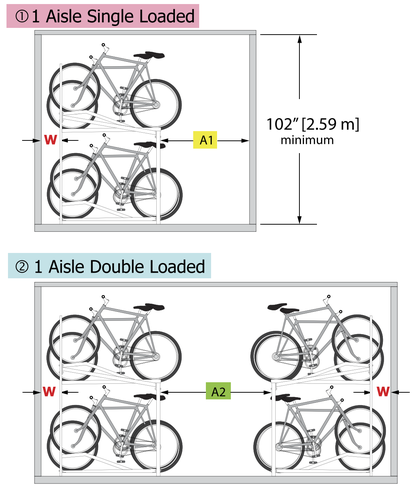

DOUBLE DECKER BIKE PARKING
CLEARANCES - SIDE VIEW

DOUBLE DECKER BIKE PARKING
PERSPECTIVE

Model	Bicycle	Width	Depth	Height
DD04	4	33.5"	53"	86"
DD06	6	48"	53"	86"
DD08	8	62.5"	53"	86"
DD10	10	77"	53"	86"
DD12	12	91.5"	53"	86"
DD14	14	106"	53"	86"
DD16	16	120.5"	53"	86"

DOUBLE DECKER BIKE PARKING
SIZE TABLE

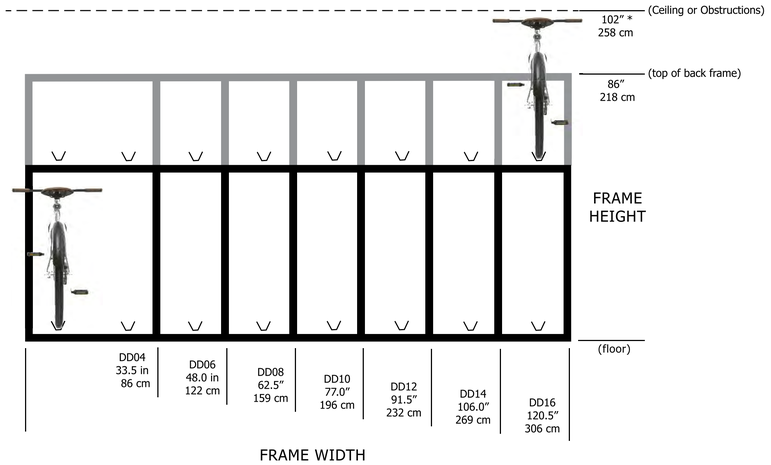

DOUBLE DECKER BIKE PARKING
FRAME WIDTH - FRONT VIEW

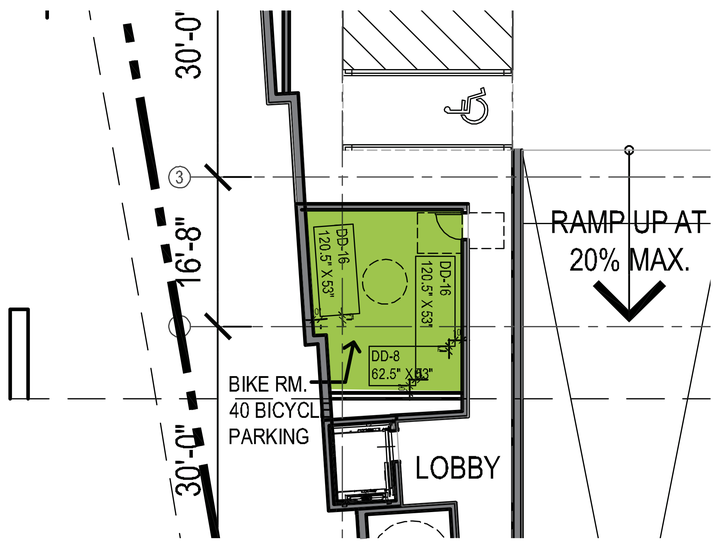

LEVEL B1

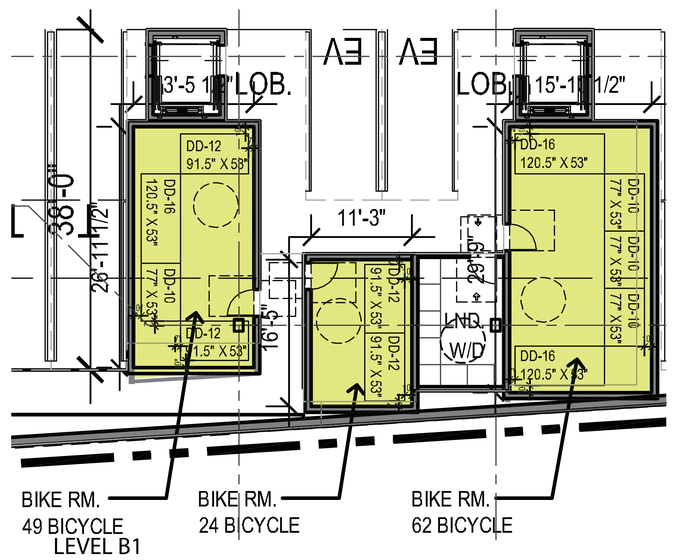

LEVEL B1

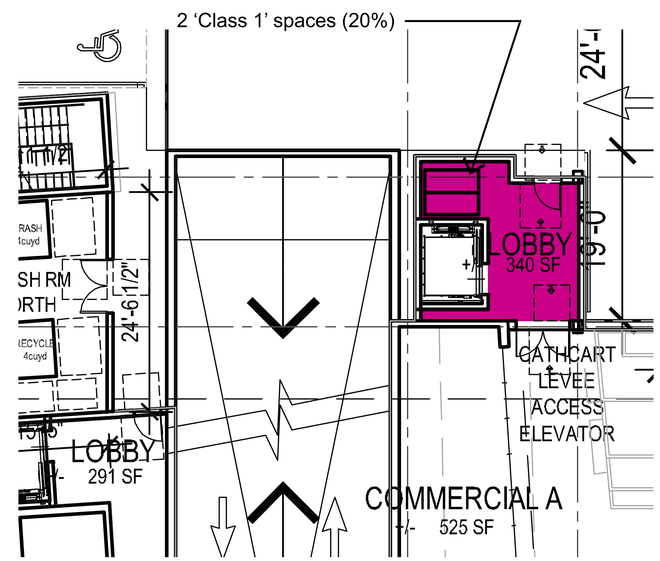

LEVEL 1

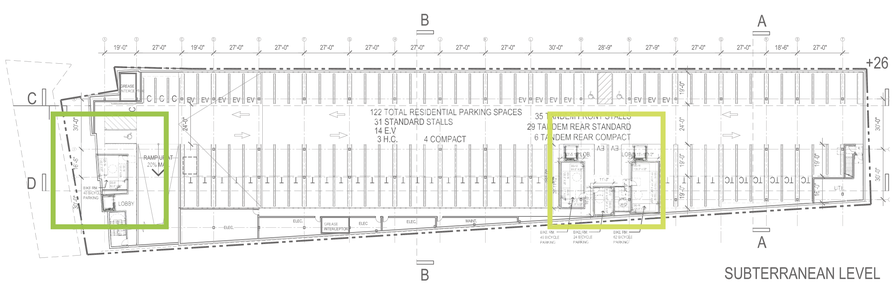

SUBTERRANEAN LEVEL
(NOT TO SCALE)

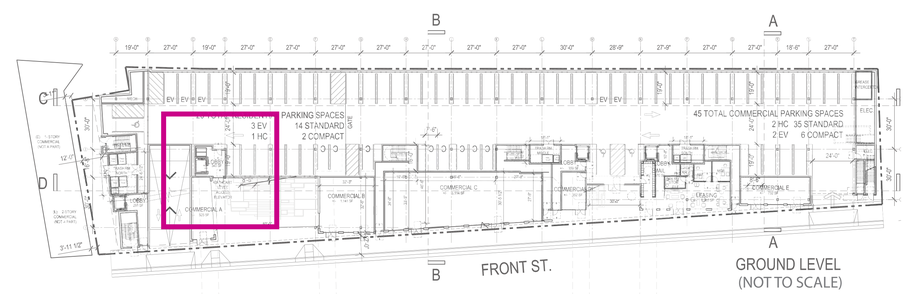

GROUND LEVEL
(NOT TO SCALE)

NOT TO SCALE @ 11x17
SCALE: 1/8" = 1'-0" @ 24x36

N 0' 8' 16' 24'

RIVERFRONT PROJECT
SANTA CRUZ, CA
HPA #16319

BIKE PARKING EXHIBIT
10/18/19

SC RIVERFRONT

HUMPHREYS & PARTNERS ARCHITECTS, L.P.
5339 Alpha Rd., Suite 300, Dallas, TX 75240 | 972.701.9636 | www.humphreys.com

© 2019 by Humphreys & Partners Architects, L.P. The arrangements depicted herein are the sole property of Humphreys & Partners Architects, LP and may not be reproduced in any form without its written permission. Architectural conceptual site plans are for feasibility purpose only. Revisions may occur due to further investigation from regulatory authorities and building code analysis. Dimensions shown are of a strategic intent only. Refer to surveys and civil drawings for technical information and measurements.

North building TOTAL WEEKLY

Usage	Total SF or # of BDR.	Refuse in CY	Recycle in CY
Retail	8,208	8.21	8.21
Restaurant	5,841	11.68	5.84
Office	0	0.00	0.00
Multifamily	44	4.64	2.32
	Total	24.53	16.37

Middle building TOTAL WEEKLY

Usage	Total SF or # of BDR.	Refuse in CY	Recycle in CY
Retail	352	0.35	0.35
Restaurant	0	0.00	0.00
Office	0	0.00	0.00
Multifamily	96	10.11	5.06
	Total	10.47	5.41

South building TOTAL WEEKLY

Usage	Total SF or # of BDR.	Refuse in CY	Recycle in CY
Retail	732	0.73	0.73
Restaurant	0	0.00	0.00
Office	0	0.00	0.00
Multifamily	68	7.16	3.58
	Total	7.90	4.31

North building 3X WEEKLY PICKUP

Usage	Refuse in CY	Recycle in CY
Retail	2.74	2.74
Restaurant	3.89	1.95
Office	0.00	0.00
Multifamily	1.55	0.77
REQ	8.18	5.46
PROPOSED	10	8

Middle building 3X WEEK PICKUP

Usage	Refuse in CY	Recycle in CY
Retail	0.12	0.12
Restaurant	0.00	0.00
Office	0.00	0.00
Multifamily	3.37	1.69
REQ	3.49	1.80
PROPOSED	4	2

South building 3X WEEK PICKUP

Usage	Refuse in CY	Recycle in CY
Retail	0.24	0.24
Restaurant	0.00	0.00
Office	0.00	0.00
Multifamily	2.39	1.19
REQ	2.63	1.44
PROPOSED	4	2

STAGING AREA FOR TRASH ROOM MIDDLE
AND TRASH ROOM SOUTH BINS

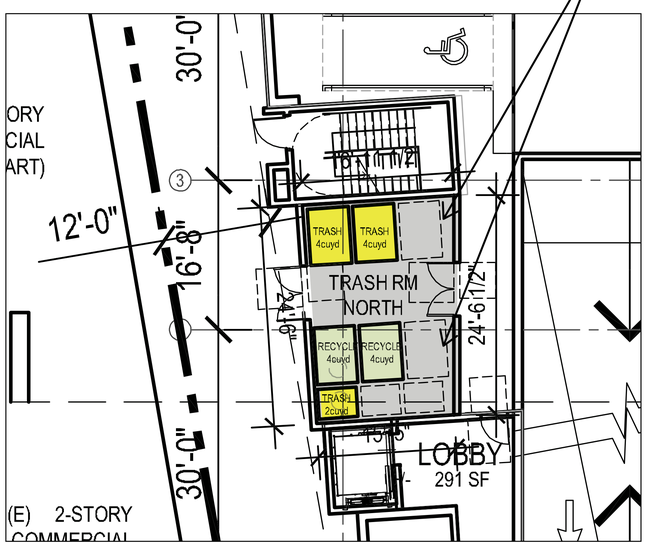

TRASH ROOM NORTH
LEVEL 1

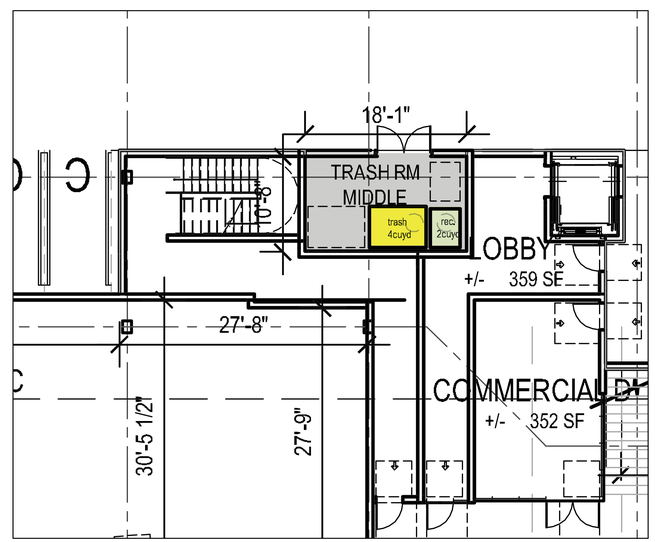

TRASH ROOM MIDDLE
LEVEL 1

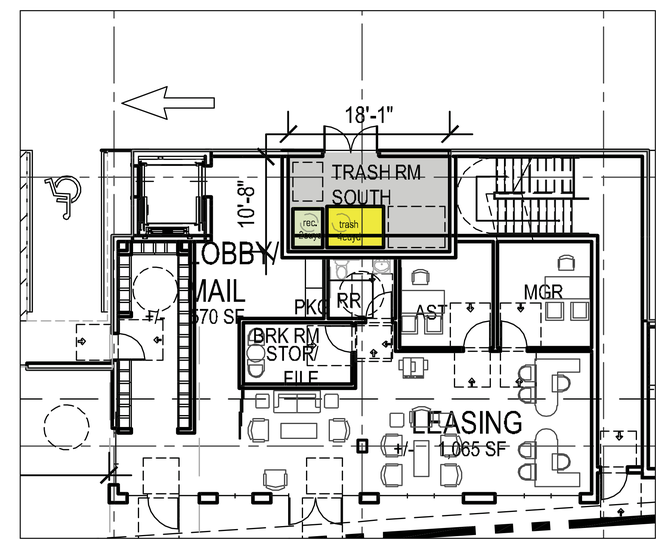

TRASH ROOM SOUTH
LEVEL 1

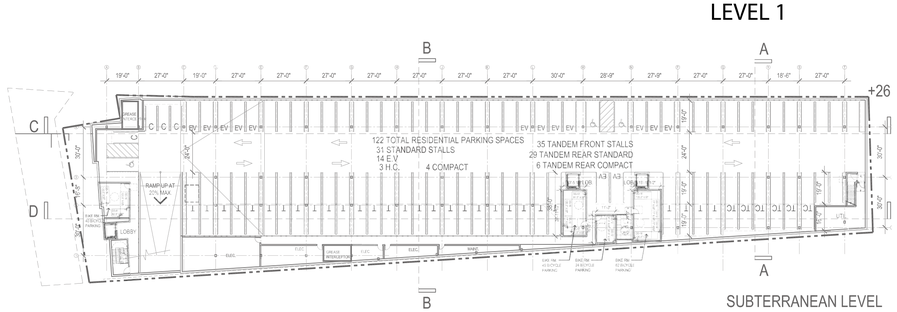

SUBTERRANEAN LEVEL

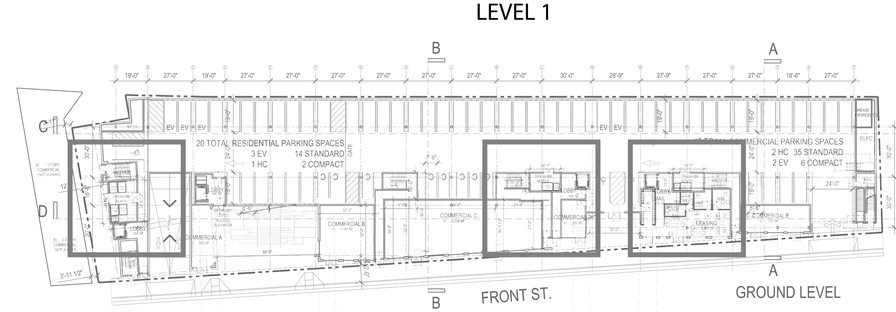

FRONT ST. GROUND LEVEL

NOT TO SCALE @ 11x17
SCALE: 1/8" = 1'-0" @ 24x36

N 0' 8' 16' 24'

22

RIVERFRONT PROJECT
SANTA CRUZ, CA
HPA #16319

TRASH EXHIBIT

10/18/19

SC RIVERFRONT

HUMPHREYS & PARTNERS ARCHITECTS, L.P.
5339 Alpha Rd., Suite 300, Dallas, TX 75240 | 972.701.9636 | www.humphreys.com

© 2019 by Humphreys & Partners Architects, L.P. The arrangements depicted herein are the sole property of Humphreys & Partners Architects, LP and may not be reproduced in any form without its written permission. Architectural conceptual site plans are for feasibility purpose only. Revisions may occur due to further investigation from regulatory authorities and building code analysis. Dimensions shown are of a strategic intent only. Refer to surveys and civil drawings for technical information and measurements.

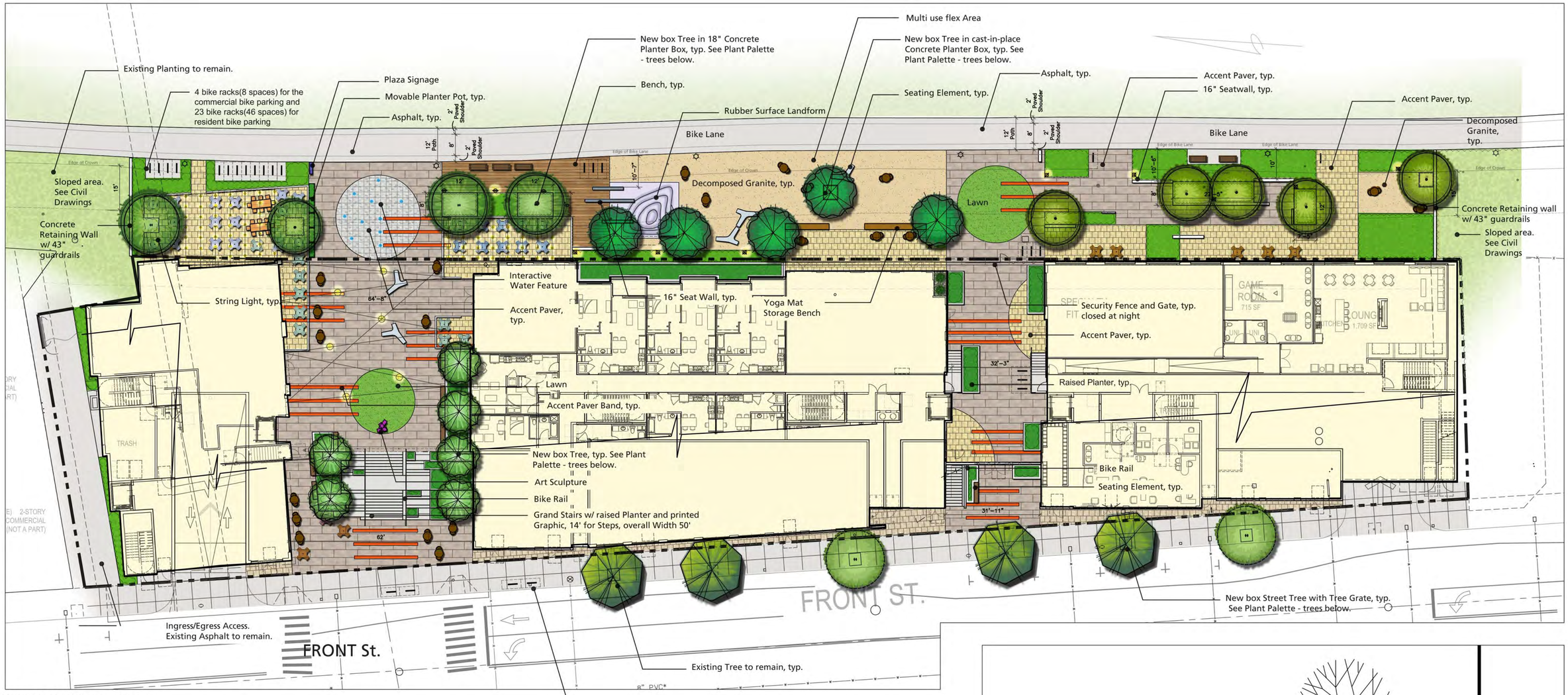

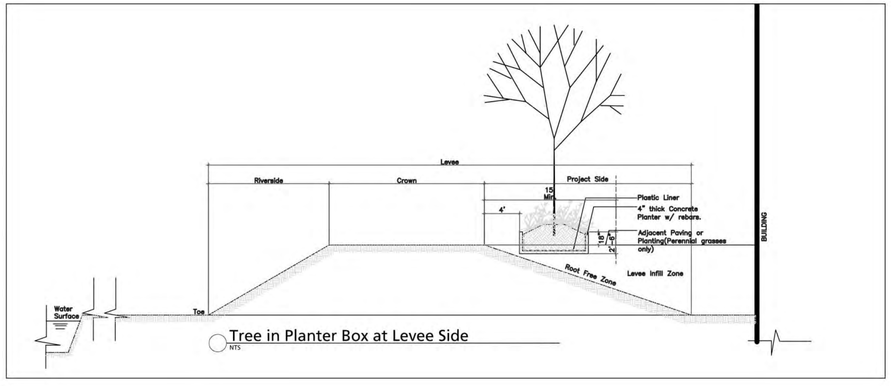

PLANT PALETTE - Trees

Latin Name	Common Name	Mature Width	Mature Height
Pistachia chinensis	Chinese Pistache	45	40
Platanus acerifolia 'Columbia'	London Plane	50	40
Quercus frainetto 'Forest Green'	Hungarian Oak	40	30
Quercus virginiana	Southern Live Oak	40	40
Ulmus parvifolia 'Drake'	Drake Chinese Elm	40	40

PLANT PALETTE - Shrubs and Grasses

SHRUBS					
KEY	SIZE	BOTANICAL NAME	COMMON NAME	SPACING**/COMMENTS	WUCOLS
LC	5 Gal	Loropetalum chinense	Fringe Flower	60" O.C. Drought Tolerant	L
BG	5 Gal	Bouteloua gracilis 'blonde ambition'	Blue grama	24" O.C. Drought Tolerant	L
RC	5 Gal	Rhamnus c. 'Mound San Bruno'	Mound San Bruno Coffeeberry	60" O.C. Native/Drought Tolerant	VL
SL	5 Gal	Salvia clevelandii	Cleveland Sage	30" O.C. Native/Drought Tolerant	L
**If used as or noted on plans as groundcover					
PERENNIALS and GRASSES					
KEY	SIZE	BOTANICAL NAME	COMMON NAME	SPACING**/COMMENTS	WUCOLS
AA	5 Gal	Artemisia abrotanum	Southernwood	24" O.C.	L
AB	5 Gal	Anigozanthos 'Big Red'	Red Kangaroo Paw	24" O.C.	L
FI	1 Gal	Festuca idahoensis 'Siskiyou Blue'	Idaho Fescue	18" O.C. Native/Drought Tolerant	VL
LO	1 Gal	Lomandra 'Lime Tuff'	Dwarf Rush Mat	24" O.C. Drought Tolerant	L
PB	5 Gal	Perovskia 'Blue Spire'	Russian Sage	24" O.C.	L
PH	1 Gal	Pennisetum 'Bunny Tail'	Fountain Grass	24" O.C. Drought Tolerant	L
SA	1 Gal	Sedum spectabile 'Autumn Joy'	Showy Stonecrop	24" O.C.	L
SC	1 Gal	Senecio cineraria	Dusty miller	12" O.C.	L
VB	1 Gal	Verbena bonariensis	Purple Top	24" O.C.	L
GROUNDCOVERS					
KEY	SIZE	BOTANICAL NAME	COMMON NAME	SPACING**/COMMENTS	WUCOLS
ESC	1 Gal	Eschscholzia californica	California Poppy	18" O.C. Native/Drought Tolerant	VL
HEC	1 Gal	Heuchera 'Canyon Pink'	Canyon Pink Coral Bells	18" O.C.	M
SM	1 Gal	Senecio mandraliscae	Kleinia	24" O.C.	L
VINES					
KEY	SIZE	BOTANICAL NAME	COMMON NAME	COMMENTS	WUCOLS
PA	5 Gal	Polygonum aubertii	Silver Lace Vine	Drought Tolerant	L
SCVURPPP APPROVED PLANT LIST FOR STROMWATER TREATMENT					
KEY	SIZE	BOTANICAL NAME	COMMON NAME	COMMENTS	WUCOLS
AM	5 Gal	Arctostaphylos densiflora 'McMinn'	Manzanita	60" O.C. Native/Drought Tolerant	L
BP	1 Gal	Baccharis pilularis	Coyote Brush	36" O.C. Native/Drought Tolerant	L
CA	1 Gal	Calamagrostis acutifolia 'Stricta'	Feather Reed Grass	36" O.C.	L
CT	5 Gal	Chondropetalum tectorum	Small Cape Rush	30" O.C. Drought Tolerant	L
MU	1 Gal	Muhlenbergia rigens	Deer Grass	36" O.C. Native/Drought Tolerant	L
NP	1 Gal	Nassella pulchra	Purple Needlegrass	18" O.C. Drought Tolerant	VL
DL	5 Gal	Dietes 'Lemon Drops'	Fortnight Lily	30" O.C. Drought Tolerant	L
RL	5 Gal	Rhamnus californica 'Little Sur'	Little Sur Coffeeberry	36" O.C. Native/Drought Tolerant	L

SCALE: 1/16" = 1'-0"
0' 8' 16' 32'

L1

Sheet 1 of 1

RIVERFRONT APARTMENTS
SANTA CRUZ, CA
HPA# 16319

THE GUZZARDO PARTNERSHIP INC.
Landscape Architects · Land Planners

CONCEPTUAL LANDSCAPE PLAN

September 10, 2019

SC RIVERFRONT

HUMPHREYS & PARTNERS ARCHITECTS, L.P.
5339 Alpha Rd., Suite 300, Dallas, TX 75240 | 972.701.9636 | www.humphreys.com

© 2016 by HUMPHREYS & PARTNERS ARCHITECTS, LP The arrangements depicted herein are the sole property of Humphreys & Partners Architects, LP and may not be reproduced in any form without its written permission. Architectural conceptual site plans are for feasibility purpose only. Revisions may occur due to further investigation from regulatory authorities and building code analysis. Dimensions shown are of a strategic intent only. Refer to surveys and civil drawings for technical information and measurements.

Edcational / Information Boards

Outdoor Yoga Class

Interactive Xylophone

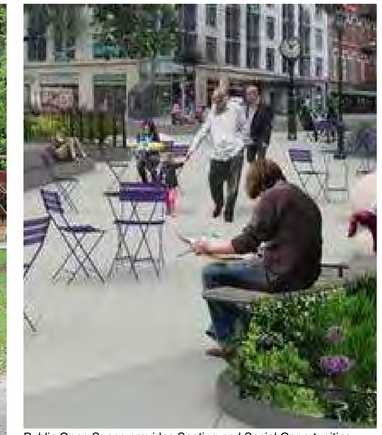
Public Open Space provides Seating and Social Opportunities

Grand Stairs with Raised Planters

Sculptual Objects

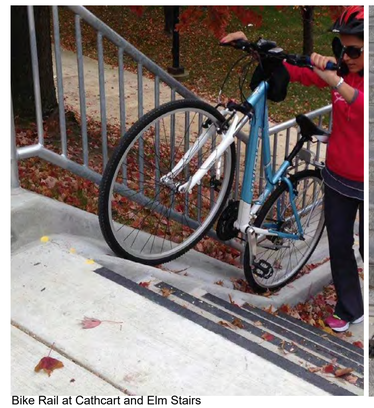

Bike Rail at Cathcart and Elm Stairs

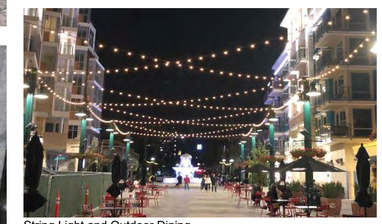
String Light and Outdoor Dining

Seasonal Accent Overhead Light for Special Events

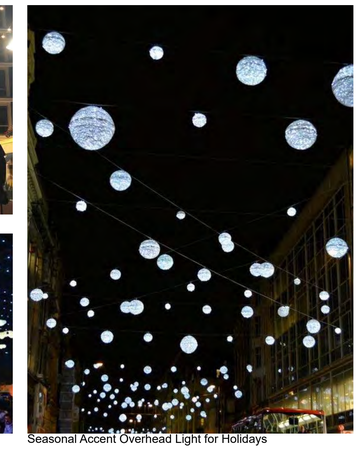
Seasonal Accent Overhead Light for Holidays

Interactive Water Jets in Pavement

Interactive Water Jets in Pavement without Water

Farmer's Market Events

Food Truck Events

Embedded fun Element in Paving

Example of Embedded Words in Paving

Interactive Talk-tube for Kids

Seat Wall Element

Historic Medallion Tells the Story

Linear Park w/ Seating Opportunities

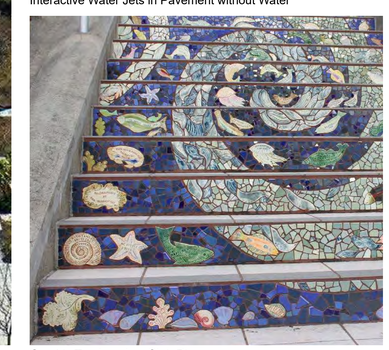
Graphic Treatment on Stair Risers

L2

RIVERFRONT PROJECT
SANTA CRUZ, CA
HPA# 16319

THE GUZZARDO PARTNERSHIP INC.
Landscape Architects · Land Planners

CONCEPTUAL LANDSCAPE IMAGERY
04/11/19

SC RIVERFRONT

HUMPHREYS & PARTNERS ARCHITECTS, L.P.
5339 Alpha Rd., Suite 300, Dallas, TX 75240 | 972.701.9636 | www.humphreys.com

© 2016 by HUMPHREYS & PARTNERS ARCHITECTS, LP The arrangements depicted herein are the sole property of Humphreys & Partners Architects, LP and may not be reproduced in any form without its written permission. Architectural conceptual site plans are for feasibility purpose only. Revisions may occur due to further investigation from regulatory authorities and building code analysis. Dimensions shown are of a strategic intent only. Refer to surveys and civil drawings for technical information and measurements.

1. ELM STREET ENTRY
Stairs invite visitors to entry. Seatwall edges and accent planting / paving define entries.

2. CATHCART GRAND STAIRS
Terraced planter elements frame view to sculpture, drawing people to levee dinning and recreational opportunities.

3. CATHCART PLAZA AND LEVEE TRAIL
Interactive water jets in pavement, outdoor dining and seating elements enliven Cathcart Plaza at the Levee trail.

4. CATHCART PLAZA AND LEVEE TRAIL
Wide public walkways allow free pedestrian movement parallel to Levee trail connecting to mounded rubber seating area.

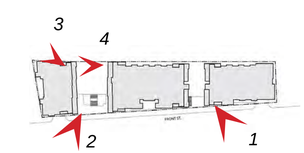

L3

RIVERFRONT PROJECT
SANTA CRUZ, CA
HPA# 16319

THE GUZZARDO PARTNERSHIP INC.
Landscape Architects · Land Planners

CONCEPTUAL PERSPECTIVE VIEWS
04/11/19

SC RIVERFRONT

HUMPHREYS & PARTNERS ARCHITECTS, L.P.
5339 Alpha Rd., Suite 300, Dallas, TX 75240 | 972.701.9636 | www.humphreys.com

© 2016 by HUMPHREYS & PARTNERS ARCHITECTS, LP The arrangements depicted herein are the sole property of Humphreys & Partners Architects, LP and may not be reproduced in any form without its written permission. Architectural conceptual site plans are for feasibility purpose only. Revisions may occur due to further investigation from regulatory authorities and building code analysis. Dimensions shown are of a strategic intent only. Refer to surveys and civil drawings for technical information and measurements.

5. LEVEE TRAIL
Looking South with seatwalls, mounded rubber surface, xylophone and flexible active spaces.

6. RELATIONSHIP OF RESIDENTIAL UNITS TO PUBLIC OPEN SPACE
Buffer planting between residential units and multi use flex area allows views and privacy.

7. MULTI USE FLEX AREA WITH VARIED SEATING OPPORTUNITIES AND UMBRELLAS
Movable furniture and umbrellas provide seating and flexibility when no formal events are programmed.

8. ELM PLAZA
View shows rainbow xylophone and historic markers to help draw public. Sliding security gate is only closed at night.

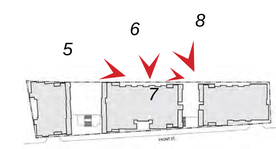

L4

RIVERFRONT PROJECT
SANTA CRUZ, CA
HPA# 16319

THE GUZZARDO PARTNERSHIP INC.
Landscape Architects · Land Planners

CONCEPTUAL PERSPECTIVE VIEWS
04/11/19

SC RIVERFRONT

HUMPHREYS & PARTNERS ARCHITECTS, L.P.
5339 Alpha Rd., Suite 300, Dallas, TX 75240 | 972.701.9636 | www.humphreys.com

© 2016 by HUMPHREYS & PARTNERS ARCHITECTS, LP The arrangements depicted herein are the sole property of Humphreys & Partners Architects, LP and may not be reproduced in any form without its written permission. Architectural conceptual site plans are for feasibility purpose only. Revisions may occur due to further investigation from regulatory authorities and building code analysis. Dimensions shown are of a strategic intent only. Refer to surveys and civil drawings for technical information and measurements.

MULTI USE FLEX AREA EVENT SCHEMES

9. FOOD TRUCK EVENT VIEW
Multi use flex area shown being used for a food truck event.

10. DANCE CLASS EVENT VIEW
Multi use flex area shown being used for a dance class.

11. FARMER'S MARKET EVENT VIEW
Multi use flex area shown being used as farmer's market.

12. ELM PLAZA
12 foot wide, paved levee path with edge striping at the 8-foot width mark. Central lawn area modulated by paving stripes with fun words embedded enliven the Levee trial. Potential yoga class in background.

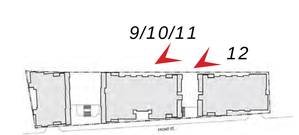

L5

RIVERFRONT PROJECT
SANTA CRUZ, CA
HPA# 16319

THE GUZZARDO PARTNERSHIP INC.
Landscape Architects · Land Planners

CONCEPTUAL PERSPECTIVE VIEWS
04/11/19

SC RIVERFRONT

HUMPHREYS & PARTNERS ARCHITECTS, L.P.
5339 Alpha Rd., Suite 300, Dallas, TX 75240 | 972.701.9636 | www.humphreys.com

© 2016 by HUMPHREYS & PARTNERS ARCHITECTS, LP The arrangements depicted herein are the sole property of Humphreys & Partners Architects, LP and may not be reproduced in any form without its written permission. Architectural conceptual site plans are for feasibility purpose only. Revisions may occur due to further investigation from regulatory authorities and building code analysis. Dimensions shown are of a strategic intent only. Refer to surveys and civil drawings for technical information and measurements.

13. LINEAR PARK
Educational / information boards tell story of the River, wildlife or historical moments. Flexible furniture and seatwall provide many seating opportunities.

13

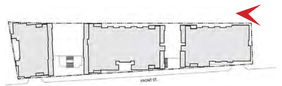

L6

RIVERFRONT PROJECT
SANTA CRUZ, CA
HPA# 16319

THE GUZZARDO PARTNERSHIP INC.
Landscape Architects · Land Planners

CONCEPTUAL PERSPECTIVE VIEWS
04/11/19

SC RIVERFRONT

HUMPHREYS & PARTNERS ARCHITECTS, L.P.
5339 Alpha Rd., Suite 300, Dallas, TX 75240 | 972.701.9636 | www.humphreys.com

© 2016 by HUMPHREYS & PARTNERS ARCHITECTS, LP The arrangements depicted herein are the sole property of Humphreys & Partners Architects, LP and may not be reproduced in any form without its written permission. Architectural conceptual site plans are for feasibility purpose only. Revisions may occur due to further investigation from regulatory authorities and building code analysis. Dimensions shown are of a strategic intent only. Refer to surveys and civil drawings for technical information and measurements.

© BKF Engineers

RIVERFRONT PROJECT
412-508 FRONT STREET
SANTA CRUZ, CA 95060

SITE MAP
1"=40'

ABBREVIATIONS

AB	AGGREGATE BASE	LG	LIP OF GUTTER
AC	ASPHALT CONCRETE	LP	LOW POINT
ACC	ACCESSIBLE	MH	MANHOLE
ACP	ASBESTOS CEMENT PIPE	N	NORTH
AD	AREA DRAIN	(N)	NEW
ALT	ALTERNATIVE	NTS	NOT TO SCALE
BC	BACK OF CURB	OH	OVERHEAD (WIRES)
BFP	BACKFLOW PREVENTER	PB	PULL BOX
BLDG	BUILDING	PP	POWER POLE
BOT	BOTTOM	(P)	PROPOSED
BW	BOTTOM OF WALL/BACK OF WALK	P/L	PROPERTY LINE
CB	CATCH BASIN	PCC	PORTLAND CEMENT CONCRETE
CI	CURB INLET	P/SBC	POWER/SBC TRENCH
CLR	CLEAR (OD TO OD)	P.F.S.E.	PRIVATE FIRE SERVICE EASEMENT
C&G	CURB AND GUTTER	P.I.E.E.	PRIVATE INGRESS, EGRESS EASEMENT
℄,CL	CENTERLINE	P.S.D.E.	PRIVATE STORM DRAIN EASEMENT
CLF	CHAIN LINK FENCE	P.S.S.E.	PRIVATE SANITARY SEWER EASEMENT
CO	CLEANOUT	P.U.E.	PUBLIC UTILITY EASEMENT
CONC	CONCRETE	PVC	POLYVINYL CHLORIDE PIPE
CONST	CONSTRUCTION	R	RIGHT/RADIUS
CR	CURB RETURN	RCP	REINFORCED CONCRETE PIPE
CW	CROSSWALK	RPA	REDUCED PRESSURE ASSEMBLY
DET/DTL	DETAIL	R/W	RIGHT-OF-WAY
DI	DROP INLET	RWD	REDWOOD
DIP	DUCTILE IRON PIPE	S	SLOPE/SOUTH
D/W	DRIVEWAY	SD	STORM DRAIN
DWG	DRAWING	SDMH	STORM DRAIN MANHOLE
E	EAST/ELECTRIC	SF	SQUARE FEET
(E),EX	EXISTING	SG	SUBGRADE
ELEC	ELECTRIC	SHT	SHEET
ELEV	ELEVATION	S/L	STREET LIGHT
EP	EDGE OF PAVEMENT	SLB	STREET LIGHT BOX
E.V.A.E.	EMERGENCY VEHICLE ACCESS EASEMENT	SLD	SEE LANDSCAPE DRAWINGS
FC	FACE OF CURB	SL	STREET LIGHT CONDUIT
FDC	FIRE DEPT CONNECTION	SS	SANITARY SEWER
FF	FINISH FLOOR	SSCO	SANITARY SEWER CLEANOUT
FG	FINISHED GRADE	SSMH	SANITARY SEWER MANHOLE
FH	FIRE HYDRANT	ST	STREET
FL	FLOWLINE	STD	STANDARD
FT	FEET	S/W	SIDEWALK
FW	FIRE WATER	T, TEL	TELEPHONE
G	GAS	TC	TOP OF CURB
GB	GRADE BREAK	TH	TOP OF HEADER
GR	GRATE	TRC	TOP OF ROLLED CURB
GRD	GROUND	TS	TOP OF STEP
GS	GARAGE SLAB	TSW	TOP OF SCREEN WALL
GYW	GUY WIRE	TW	TOP OF WALL
HP	HIGH POINT	TYP	TYPICAL
I.E.E.	INGRESS, EGRESS EASEMENT	UG	UNDERGROUND
INV	INVERT (ELEVATION)	VCP	VITRIFIED CLAY PIPE
IRR	IRRIGATION	W	WATER/WEST
JP	JOINT UTILITY POLE	WM	WATER METER
JT	JOINT UTILITY TRENCH	WV	WATER VALVE
LAT	LATERAL	XWALK	CROSSWALK
LF	LINEAL FEET		

CIVIL ENGINEER:

BKF ENGINEERS
1730 NORTH FIRST STREET
SUITE 600
SAN JOSE, CA 95112
TEL: (408) 467-9100
ATTN: MITCH BURLEY

OWNER/APPLICANT

OWEN LAWLOR
LAWLOR LAND USE
612 SPRING STREET
SANTA CRUZ, CA 95060
TEL: (831) 457-1331

GENERAL NOTES

1. TOPOGRAPHIC MAPPING WAS PERFORMED BY:
   BOWMAN & WILLIAMS
   1011 CEDAR STREET
   SANTA CRUZ, CA 95060
   SURVEY DATE: 4/04/2016
2. BENCHMARK: BM F4-1A ELEVATION 11.526 NGVD29. EASTSIDE FRONT STREET OPPOSITE METRO CENTER.
3. THE BASIS OF BEARINGS FOR THIS SURVEY IS THE CALCULATED BEARING FROM THE FOUND 3/4" IRON PIPE AT THE NORTHEAST CORNER OF THE LANDS OF KELLEY ET UX, AND THE FOUND 3/4" IRON PIPE AT THE NORTHEAST CORNER OF THE LANDS OF ALFRED P. AND HAZEL ANKER, AS SHOWN ON SHEET 16 OF 19 OF THE MAP ENTITLED 'SAN LORENZO RIVER FLOOD CONTROL PROJECT', FILED IN VOLUME 42 OF MAPS AT PAGE 16, SANTA CRUZ COUNTY RECORDS, = N 3°57'57" W (208.42 FEET CALCULATED VS 208.41 AS FOUND)
4. CONTOUR INTERVAL IS ONE FOOT. ELEVATIONS AND DISTANCES SHOWN ARE IN DECIMAL FEET.

SHEET INDEX

C1.1	TITLE SHEET
C1.2	CONSTRUCTION NOTES
C2.1	EXISTING CONDITION PLAN
C3.1	DEMOLITION PLAN
C4.1	SITE PLAN
C5.1	GRADING PLAN
C5.2	SITE SECTIONS
C6.1	UTILITY PLAN
C7.1	STORM WATER CONTROL PLAN
C8.1-C8.2	EROSION CONTROL PLAN
C9.1	CONSTRUCTION DETAILS
C9.2	CITY STANDARD DETAILS

ENGINEER'S STATEMENT

THESE IMPROVEMENT PLANS HAVE BEEN PREPARED BY ME OR UNDER MY DIRECTION IN ACCORDANCE WITH STANDARD ENGINEERING PRACTICE.

MITCHEL W. BURLEY
CIVIL ENGINEER

DATE

RCE NUMBER: 57874

EXPIRES: 6/30/20

REGISTERED PROFESSIONAL ENGINEER
MITCHEL W. BURLEY
No. 57874
Exp. 6-30-20
CIVIL
STATE OF CALIFORNIA

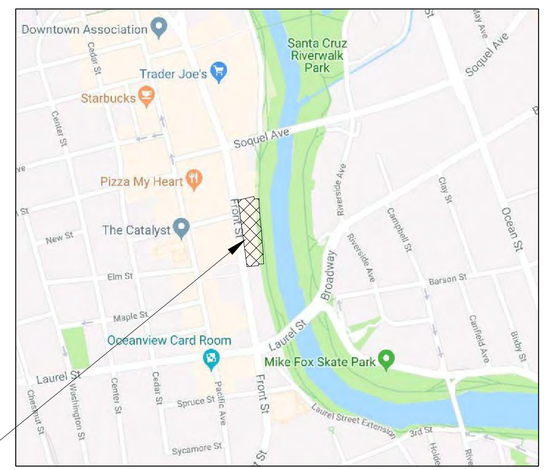

PROJECT LOCATION

VICINITY MAP
N.T.S.

BKF 100 YEARS
ENGINEERS . SURVEYORS . PLANNERS
1730 NORTH FIRST ST., SUITE 600
SAN JOSE, CA 95112
(408) 467-9100
www.bkf.com

RIVERFRONT PROJECT
412, 418, 428, 440, 504, AND 508 FRONT STREET
TITLE SHEET
SANTA CRUZ COUNTY CALIFORNIA

SANTA CRUZ

Revisions	No.

Date 05/20/19
Scale AS SHOWN
Design MWB
Drawn .
Approved .
Job No 20176131

Drawing Number:
C1.1
1 OF 13

DRAWING NAME: K:\2017\176131_Riverfront_Apt_Santa_Cruz\ENG\BASE_FILES\RFC\VILPLANS01.dwg
PLOT DATE: 05-20-19 PLOTTED BY: BUR

© BKF Engineers

GENERAL NOTES

1. APPROVAL OF THESE PLANS DOES NOT RELIEVE THE CONTRACTOR/OWNER OF THE RESPONSIBILITY FOR THE CORRECTION OF MISTAKES, ERRORS OR OMISSIONS.
2. CONTRACTOR SHALL FAMILIARIZE HIMSELF WITH THE STATE OF CALIFORNIA BEST MANAGEMENT PRACTICES HANDBOOK FOR APPLICABLE CONTROL MEASURES AND EMPLOY ITS PROVISIONS THROUGHOUT ALL CONSTRUCTION.
3. ALL CONTRACTORS WILL BE RESPONSIBLE FOR THE VERIFICATION OF LOCATIONS OF ALL EXISTING UTILITIES IN THE FIELD. ALL CONTRACTORS SHALL CALL U.S.A. (CA. 1-800-277-2600) 48 HOURS BEFORE DIGGING. EXCAVATION FOR UNDERGROUND FACILITIES SHALL NOT BE PERMITTED PRIOR TO CONTACTING UNDERGROUND SERVICE ALERT. UNDER NO CIRCUMSTANCES WILL EXCAVATION COMMENCE BEFORE BEING ISSUED AN IDENTIFICATION NUMBER FROM U.S.A. (SECTION 4210.1 OF THE GOVERNMENT CODE)
4. IT IS THE RESPONSIBILITY OF THE CONTRACTOR TO OBTAIN ALL PERMITS NECESSARY TO PERFORM THE IMPROVEMENTS IN THESE PLANS FROM THE APPROPRIATE AGENCIES AND TO COMPLY WITH THE AGENCIES' REQUIREMENTS. THE CONTRACTOR SHALL COMPLY WITH ALL APPLICABLE NATIONAL, STATE, AND LOCAL LAWS.
5. WHEN IT IS FOUND THAT FIELD CONDITIONS ARE NOT AS SHOWN ON THE PLANS, THE CONSULTING ENGINEER MUST MAKE REVISIONS AND/OR ADJUSTMENTS TO THE SATISFACTION OF THE CITY ENGINEER/OWNER PRIOR TO FURTHER CONSTRUCTION.
6. CONTRACTOR SHALL CAREFULLY PRESERVE THE SURROUNDING PROPERTY BY CONFINING OPERATION WITHIN THE LIMITS OF WORK AREA. ALL EXISTING UTILITIES AND IMPROVEMENTS THAT BECOME DAMAGED DURING CONSTRUCTION SHALL BE COMPLETELY RESTORED TO THE SATISFACTION OF THE CITY ENGINEER/OWNER AT THE SOLE EXPENSE OF THE CONTRACTOR.
7. ANY DISCHARGE (DURING CONSTRUCTION) OF GROUNDWATER INTO THE DOWNSTREAM STORM SYSTEM MUST BE UNCONTAMINATED. THE CONTRACTOR SHALL MAKE THIS DETERMINATION PRIOR TO ANY DISCHARGE. CONTRACTOR SHALL SECURE A DISCHARGE PERMIT FROM THE RWQCB PRIOR TO CONSTRUCTION.
8. CONSTRUCTION STOCKPILING AND STAGING PLANS SHALL BE SUBMITTED TO ENGINEER PRIOR TO COMMENCEMENT OF CONSTRUCTION.
9. ALL STANDARD STREET MONUMENTS, LOT CORNER PIPES, AND OTHER PERMANENT MONUMENTS DISTURBED DURING THE PROCESS OF CONSTRUCTION SHALL BE REPLACED AT THE SOLE EXPENSE OF THE CONTRACTOR AND A RECORD OF SURVEY OR CORNER RECORD PER SECTION 8771 OF THE PROFESSIONAL LAND SURVEYORS ACT FILED BEFORE ACCEPTANCE OF THE IMPROVEMENTS BY THE CITY.
10. CONTRACTOR SHALL KEEP UP-TO-DATE A COMPLETE RECORD SET OF PRINTS OF THE CONTRACT DRAWINGS SHOWING EVERY CHANGE FROM THE ORIGINAL DRAWINGS MADE DURING THE COURSE OF CONSTRUCTION INCLUDING EXACT LOCATION, SIZES, MATERIALS AND EQUIPMENT. A COMPLETE SET OF CORRECTED AND COMPLETED RECORD DRAWING PRINTS SHALL BE SUBMITTED TO THE ENGINEER PRIOR TO FINAL ACCEPTANCE FOR REVIEW AND APPROVAL BY THE ENGINEER.
11. PROVIDE ACCESS AT ALL TIMES TO ALL ABUTTING PROPERTIES, EXCEPT AS APPROVED BY THE INSPECTOR. 48 HOURS WRITTEN NOTICE MUST BE GIVEN TO THE AFFECTED PROPERTY OWNER(S) WHEN ACCESS IS AFFECTED. TRENCHES SHALL BE BACKFILLED AND PAVED (TEMPORARY CUTBACK ASPHALT) PRIOR TO LEAVING THE JOB SITE EACH WORKDAY. THE INSPECTOR MAY APPROVE STEEL PLATING AT HIS DISCRETION.
12. CONTRACTOR IS REQUIRED TO ASSUME SOLE AND COMPLETE RESPONSIBILITY FOR JOB SITE CONDITIONS DURING THE COURSE OF CONSTRUCTION OF THE PROJECT, INCLUDING SAFETY OF ALL PERSONS AND PROPERTY; THIS REQUIREMENT SHALL BE MADE TO APPLY CONTINUOUSLY AND NOT BE LIMITED TO NORMAL WORKING HOURS.
13. ALL CONSTRUCTION MATERIALS, EQUIPMENT, AND DEBRIS ARE PROHIBITED FROM BEING STORED IN THE PUBLIC RIGHT OF WAY. LANE CLOSURES FOR PARKING, STORAGE OF MATERIALS AND/OR EQUIPMENT, OR STOCKPILING WILL NOT BE PERMITTED.
14. THE CONTRACTOR SHALL CONFORM TO THE RULES AND REGULATIONS OF THE CONSTRUCTION SAFETY ORDERS OF THE STATE DIVISION OF OCCUPATIONAL SAFETY AND HEALTH PERTAINING TO EXCAVATION AND TRENCHES PER SECTION 306 OF THE STANDARD PROVISIONS.
15. AT ALL TIMES DURING CONSTRUCTION AND UNTIL FINAL COMPLETION AND ACCEPTANCE OF THE WORK, THE CONTRACTOR SHALL PREVENT THE FORMATION OF AN AIRBORNE DUST NUISANCE PER SECTION 7-8 OF THE STATE STANDARD PROVISIONS. THE CONTRACTOR SHALL PERFORM SUCH TREATMENT WITHIN 2 HOURS AFTER NOTIFICATION BY THE CITY THAT AN AIRBORNE NUISANCE EXISTS.
16. SIDEWALK AND/OR WALKWAY AREAS TO REMAIN FREE AND CLEAR OF ANY OBSTRUCTIONS AND TO ALLOW FOR THE SAFE PASSAGE OF THE GENERAL PUBLIC. ANY CONSTRUCTION FENCING SHALL BE BEHIND THE PROPERTY LINE. ALL CONSTRUCTION-RELATED DEBRIS TO BE PLACED ON PRIVATE PROPERTY.
17. THE EVENT THAT HUMAN REMAINS AND/OR CULTURAL MATERIALS ARE FOUND, ALL PROJECT-RELATED CONSTRUCTION SHALL CEASE WITHIN A 100-FOOT RADIUS. THE CONTRACTOR SHALL, PURSUANT TO SECTION 7050.5 OF THE HEALTH AND SAFETY CODE, AND SECTION 5097.94 OF THE PUBLIC RESOURCES CODE OF THE STATE OF CALIFORNIA, NOTIFY THE SANTA CRUZ COUNTY CORONER IMMEDIATELY.

FIRE PREVENTION NOTES

1. THE ONSITE FIRE HYDRANT SHALL BE FLUSHED AND PLACED IN SERVICE PRIOR TO COMBUSTIBLE MATERIALS BEING BROUGHT ON SITE.
2. FIRE LINES SHALL BE INSTALLED AND MAINTAINED PRIOR TO COMBUSTIBLE MATERIALS BEING BROUGHT ON SITE.
3. FIRE LANES SHALL REMAIN CLEAR THROUGHOUT CONSTRUCTION.

SURFACE IMPROVEMENT NOTES

1. ALL PAVING SHALL CONFORM TO THE GEOTECHNICAL INVESTIGATION AND PAVEMENT DESIGN PREPARED BY ENGEO AND TO THE CITY STANDARD PLANS AND SPECIFICATIONS, AS APPLICABLE.
2. A DEEPENED CURB EXTENDING 3" MIN. BELOW PAVEMENT SUBGRADE SHALL BE INSTALLED AS A PART OF ALL NEW CURB/CURB & GUTTER, WHERE ADJACENT TO LANDSCAPED AREAS.
3. MANHOLES, WATER VALVE BOXES, CLEAN OUT FRAMES AND COVERS SHALL BE BROUGHT TO FINISHED GRADE BY THE CONTRACTOR AFTER PAVING IS COMPLETED.
4. GRADE BREAKS ON CURBS AND SIDEWALKS SHALL BE ROUNDED OFF (WHILE CONCRETE FINISHING WORK IS IN PROGRESS) DURING IN FORM WORK AND FINISHED SURFACING.
5. POSITIVE SURFACE GRADIENTS OF AT LEAST 2% MUST BE PROVIDED ADJACENT TO FOUNDATIONS IN ORDER TO DIRECT SURFACE WATER TOWARD COLLECTION AND DISCHARGE FACILITIES.

UTILITY NOTES

1. ALL WORK WITHIN THE PUBLIC RIGHT OF WAY (OFF-SITE) SHALL BE DONE IN ACCORDANCE WITH THE CITY OF SANTA CRUZ AND THE CITY OF SANTA CRUZ WATER DEPARTMENT STANDARD SPECIFICATIONS AND DETAILS, UNLESS OTHERWISE NOTED. ALL WORK ON PRIVATE PROPERTY (ON-SITE) SHALL BE DONE IN ACCORDANCE WITH THESE PLANS, NOTES AND DETAILS, AS OUTLINED HEREIN.
2. ACCURATE VERIFICATION AS TO SIZE, LOCATION, AND DEPTH OF EXISTING UNDERGROUND FACILITIES SHALL BE THE RESPONSIBILITY OF THE CONTRACTOR. THE LOCATION AND DEPTHS OF EXISTING UNDERGROUND IMPROVEMENTS ARE SHOWN IN THEIR APPROXIMATE POSITIONS BASED UPON THE INFORMATION AVAILABLE TO THE ENGINEER. ANY ADDED COST TO THE CONTRACTOR AS A RESULT OF THE ACTUAL LOCATIONS OF EXISTING UTILITIES BEING DIFFERENT FROM THAT SHOWN ON THE PLANS SHALL BE BORNE BY THE CONTRACTOR AND ASSUMED INCLUDED AND MERGED IN THE CONTRACT PRICES.
3. CONTRACTOR SHALL VERIFY ALL ELEVATIONS AND LOCATIONS OF EXISTING PIPES AND UTILITIES BEFORE EXCAVATION WORK OR MAKING CONNECTION.
4. THE NEW PIPELINE CROSSING THE EXISTING UTILITIES ARE SHOWN ACCORDING TO THE BEST AVAILABLE INFORMATION. THE CONTRACTOR SHALL VERIFY THAT TYPE, SIZE, LOCATION AND DEPTH OF ALL THE UTILITY CROSSINGS (BOTH MAINS AND LATERALS) ARE CORRECT AS SHOWN. NO GUARANTEE IS MADE THAT ALL EXISTING UTILITIES (BOTH MAINS AND LATERALS) ARE SHOWN. THE CONTRACTOR SHALL EXERCISE CAUTION WHEN EXCAVATING AND SHALL PROTECT ALL EXISTING UTILITIES (BOTH MAINS AND LATERALS) FROM DAMAGE DUE TO HIS OPERATION.
5. ALL UTILITY STRUCTURES INCLUDING BUT NOT LIMITED TO MANHOLES, CATCH BASINS, WATER VALVES, FIRE HYDRANTS, CABLE TV, TELEPHONE AND ELECTRIC VAULTS AND PULL BOXES ETC. THAT LIE WITHIN THE PUBLIC RIGHT OF WAY, EASEMENTS OR AREAS AFFECTED BY THE WORK ON THE PROJECT SHALL BE ADJUSTED TO GRADE BY THE CONTRACTOR OF THE RESPECTIVE UTILITY COMPANY FOR WHICH THE CONTRACTOR IS RESPONSIBLE TO COORDINATE.
6. UTILITY TRENCHING AND BACKFILL WORK SHALL COMPLY WITH THE RECOMMENDATIONS IN THE PROJECT GEOTECHNICAL REPORT, PROJECT NO. 14071.000.000, PREPARED BY ENGEO INC., DATED JULY 24, 2017.
7. CONTRACTOR SHALL COORDINATE UTILITY INFORMATION SHOWN ON THE PLANS WITH INSTALLATION OF PG&E, CABLE, TELEPHONE AND/OR JOINT TRENCH LAYOUT AND DETAILS.
8. CONTRACTOR SHALL VERIFY ALL EXISTING INVERT ELEVATIONS FOR STORM DRAIN AND SANITARY SEWER CONSTRUCTION PRIOR TO COMMENCEMENT OF ANY WORK. ALL WORK FOR STORM AND SANITARY SEWER INSTALLATION SHALL BEGIN AT THE DOWNSTREAM CONNECTION POINT. THIS WILL ALLOW FOR ANY NECESSARY ADJUSTMENTS TO BE MADE PRIOR TO THE INSTALLATION OF THE ENTIRE LINE. IF THE CONTRACTOR FAILS TO BEGIN AT THE DOWNSTREAM CONNECTION POINT AND WORKS DOWNSTREAM, CONTRACTOR SHALL PROCEED AT CONTRACTOR'S OWN RISK AND BE RESPONSIBLE FOR ANY ADJUSTMENTS NECESSARY.
9. CONTRACTOR SHALL PROTECT ALL EXISTING UTILITIES AND SERVICE LATERALS FROM DAMAGE DUE TO CONTRACTOR'S OPERATIONS. ANY AND ALL UTILITY LINES, SERVICES, STRUCTURES, ETC. THAT ARE DAMAGED DURING CONSTRUCTION SHALL BE REPLACED TO THE SATISFACTION OF THE CITY ENGINEER, AT THE SOLE EXPENSE OF CONTRACTOR. THE CONTRACTOR IS RESPONSIBLE FOR MAINTENANCE AND REPAIRS TO THE SERVICE TRENCH AND PAVEMENT FOR A ONE-YEAR WARRANTY PERIOD AFTER ACCEPTANCE OF THE WORK BY THE CITY. ONE YEAR AFTER ACCEPTANCE, THE CITY WILL MAKE A FINAL INSPECTION. IF REPAIRS HAVE TO BE MADE, THE CONTRACTOR OR DEVELOPER WILL BE NOTIFIED TO MAKE REPAIRS.
10. JOINT TRENCH LINES AND APPURTENANCES ARE SHOWN FOR INFORMATION ONLY. CONTRACTOR SHALL REFERENCE OTHER PLANS FOR INSTALLATION OF THESE FACILITIES.
11. CONTRACTOR SHALL STENCIL ALL CATCH BASINS WITH THE NON-POINT-SOURCE "NO DUMPING" MESSAGE PER CITY OF SANTA CRUZ STANDARDS.
12. IN THE EVENT OF WET UNSTABLE TRENCH BOTTOM OR IF GROUND WATER IS ENCOUNTERED, DEWATERING WILL BE REQUIRED. CONTRACTOR SHALL CONTACT THE GEOTECHNICAL ENGINEER FOR DEWATERING RECOMMENDATIONS.
13. ON-SITE POLYVINYL CHLORIDE (PVC) SANITARY PIPE AND FITTINGS 4" AND LARGER SHALL CONFORM TO ASTM D3034 AND F-679, SDR 26 WITH BELL AND SPIGOT TYPE RUBBER-GASKETED JOINTS, AS MANUFACTURED BY JM EAGLE, OR APPROVED EQUAL. POLYVINYL CHLORIDE PIPE AND FITTINGS 3" AND SMALLER SHALL BE SOLVENT-WELD, SCHEDULE 80.
14. SANITARY SEWER CLEANOUT FRAMES AND COVERS SHALL BE BE CHRISTY, MODEL G5, OR APPROVED EQUAL.
15. THE INSTALLED PIPE SHALL BE TESTED WITH LOW PRESSURE AIR IN ACCORDANCE WITH ASTM C828. WYES SHALL BE PLUGGED DURING THE TEST. IF THE PIPE FAILS THE AIR TEST, THE CONTRACTOR SHALL LOCATE THE SOURCE(S) OF THE LEAK AND REPAIR THE DEFECT(S) OR RELAY THE PIPE, AS NECESSARY. THE PIPE SHALL THEN BE RETESTED UNTIL A SATISFACTORY RESULT IS OBTAINED. ANY LEAKS DEVELOPED BEFORE THE END OF A 1-YEAR GUARANTEE PERIOD SHALL BE EXPEDITIOUSLY REPAIRED BY THE CONTRACTOR AT NO EXPENSE TO THE OWNER.
16. OFF-SITE (PUBLIC) STORM SEWER PIPE SHALL BE RCP. REINFORCED CONCRETE (RCP) STORM PIPE SHALL BE CLASS IV, MINIMUM WALL THICKNESS "B", CONFORMING TO ASTM C76 AND SHALL HAVE RUBBER-GASKETED JOINTS CONFORMING TO ASTM C361 AND C443.
17. ON-SITE (PRIVATE) STORM SEWER PIPE SHALL BE PVC OR RCP. PVC STORM SEWER PIPE & FITTINGS SHALL BE ASTM D-3034 SDR 35 "RING-TITE" PVC GRAVITY SEWER PIPE AS MANUFACTURED BY JM EAGLE OR APPROVED EQUAL. RCP STORM PIPE SHALL BE CLASS IV, MINIMUM WALL THICKNESS "B", CONFORMING TO ASTM C76 AND SHALL HAVE RUBBER-GASKETED JOINTS CONFORMING TO ASTM C361 AND C443.
18. ALL MANHOLES SHALL CONFORM TO CITY OF SANTA CRUZ STANDARD DETAILS.
19. ON-SITE (PRIVATE) STORM DRAIN INLETS SHALL BE U.S. CONCRETE OR APPROVED EQUAL, WITH FIELD POURED BASE. INSTALL GALVANIZED, TRAFFIC RATED FRAME AND GRATE WHERE SUBJECT TO VEHICULAR TRAFFIC.
20. AREA DRAINS IN LANDSCAPE AREAS SHALL BE DURA-DRAIN "P" SERIES AS MANUFACTURED BY KRISTAR ENTERPRISES, ADS LOW PROFILE AS MANUFACTURERED BY ADS PIPE OR APPROVED EQUAL. AREA DRAINS IN HARDSCAPE AREAS SHALL BE ZURN, MODEL ZN-513, OR APPROVED EQUAL

NOTE TO CONTRACTOR:

CONSTRUCTION CONTRACTOR AGREES THAT IN ACCORDANCE WITH GENERALLY ACCEPTED CONSTRUCTION PRACTICES, CONSTRUCTION CONTRACTOR WILL BE REQUIRED TO ASSUME SOLE AND COMPLETE RESPONSIBILITY FOR JOB SITE CONDITIONS DURING THE COURSE OF CONSTRUCTION OF THE PROJECT, INCLUDING SAFETY OF ALL PERSONS AND PROPERTY; THAT THIS REQUIREMENT SHALL BE MADE TO APPLY CONTINUOUSLY AND NOT TO BE LIMITED TO NORMAL WORKING HOURS, AND CONSTRUCTION CONTRACTOR FURTHER AGREES TO DEFEND, INDEMNIFY AND HOLD DESIGN PROFESSIONAL HARMLESS FROM ANY AND ALL LIABILITY, REAL OR ALLEGED, IN CONNECTION WITH THE PERFORMANCE OF WORK ON THIS PROJECT, EXCEPTING LIABILITY ARISING FROM THE SOLE NEGLIGENCE OF DESIGN PROFESSIONAL.

UTILITY NOTES CONT.

20. ALL WATER MAINS IN THE CITY RIGHT-OF-WAY SHALL BE PER THE CITY OF SANTA CRUZ WATER DEPARTMENT (SCWD) STANDARDS.

    A. ON PROVIDER SIDE OF METER:
    LARGE SIZE SERVICE AND DISTRIBUTION PIPES: 4" THROUGH 24": PER SCWD STANDARDS

    SMALL SIZE SERVICE PIPES: 3/4" THROUGH 3": PER SCWD STANDARDS

    B. ON CONSUMER SIDE OF METER:
    SMALL SIZE SERVICE PIPES: 3/4" THROUGH 3": COPPER PIPE OR PVC

21. ON-SITE PIPE:

    A. LARGE SIZE SERVICE AND DISTRIBUTION PIPES: (4" THROUGH 24"):

    DIP: PIPE: ANSI/AWWA C151/A21.51, THICKNESS, CLASS 50 MIN.
    FITTINGS: COMPACT: AWWA C153.
    PIPE AND FITTING LINING: CEMENT MORTAR, AWWA C104.
    PIPE AND FITTING COATING: ASPHALTIC COATING, AWWA C151
    UNRESTRAINED JOINTS: MECHANICAL JOINT: AWWA C111.

    PVC: PIPE: AWWA C900
    FITTINGS: DUCTIE IRON, SEE ABOVE.
    UNRESTRAINED JOINTS: PUSH-ON BELL AND SPIGOT; AWWA C900

    B. SMALL SIZE SERVICE PIPES: (3/4" THROUGH 3"):

    COPPER: PIPE & AND FITTINGS: ASTM B88, TYPE K, SEAMLESS WATER TUBE, ANNEALED.
    JOINTS: RESTRAIN BY COUPLINGS.

    PVC: PIPE & FITTINGS: ASTM D1785, SCHEDULE 80. RESTRAIN WITH SOLVENT CEMENT.
    DO NOT USE THREADED PIPE.

    SOLVENT CEMENT: ASTM D2564.

22. THE CONTRACTOR/OWNER SHALL VIDEO THE EXISTING 48" STORM DRAIN MAIN THREE TIMES: PRE-CONSTRUCTION; POST-CONSTRUCTION OF THE BUILDING FOUNDATION; AND POST-CONSTRUCTION OF THE PROJECT.

GRADING AND PAVING

1. ALL GRADING AND PAVING WORK SHALL COMPLY WITH THE RECOMMENDATIONS IN THE PROJECT GEOTECHNICAL REPORT, PROJECT NO. 252341, PREPARED BY TRC SOLUTIONS, DATED MARCH 22, 2016. ALL GRADING WORK SHALL BE OBSERVED AND APPROVED BY THE SOIL ENGINEER. THE SOIL ENGINEER, SHALL BE NOTIFIED AT LEAST 48 HOURS BEFORE BEGINNING ANY GRADING OPERATIONS. UNOBSERVED AND UNAPPROVED GRADING WORK SHALL BE REMOVED AND REPLACED UNDER OBSERVATION.
2. PAVEMENT EXCAVATION IN THE PUBLIC RIGHT OF WAY SHALL INCLUDE REMOVAL AND DISPOSAL OF EXISTING A.C. PAVEMENT AND PCC CURB REQUIRED FOR THE CONSTRUCTION OF NEW SURFACE IMPROVEMENTS. THE CONTRACTOR SHALL SAW-CUT EXISTING PAVEMENT AT LOCATIONS AS SHOWN ON THE PLANS PRIOR TO REMOVAL OF EXISTING PAVEMENT. ALL EXCAVATED MATERIALS SHALL BE REMOVED FROM THE PROJECT SITE AND DISPOSED OF IN AN AREA PROVIDED BY THE CONTRACTOR.
3. CONTRACTOR SHALL GRADE TO THE LINE AND ELEVATIONS SHOWN ON THE PLANS WITHIN THE FOLLOWING HORIZONTAL AND VERTICAL TOLERANCES AS INDICATED.

HORIZONTAL	VERTICAL
+0.1' TO -0.1'	0.1'

4. AGGREGATE BASE SHALL CONFORM TO CLASS 2 AGGREGATE BASE, 1-1/2" MAXIMUM, PER SECTION 26 OF THE STATE STANDARD SPECIFICATIONS, AND SHALL HAVE A MINIMUM COMPACTION OF 95% RELATIVE, UNLESS OTHERWISE NOTED. NON-CRYSTALLIZING TYPE WEED KILLER SHALL BE SPREAD OVER THE AGGREGATE BASE IN ACCORDANCE WITH MANUFACTURER'S RECOMMENDATIONS.
5. ASPHALT CONCRETE SHALL CONFORM TO TYPE B, 3/4" MAXIMUM, MEDIUM GRADING, PER SECTION 39 OF THE STATE STANDARD SPECIFICATIONS, UNLESS OTHERWISE NOTED.
6. PRIME COAT OF SC-70 LIQUID ASPHALT CONFORMING TO THE PROVISIONS OF SECTION 37 OF THE STATE STANDARD SPECIFICATIONS SHALL BE APPLIED AT THE RATE OF 0.15± TO .0.25± GALLONS PER SQUARE YARD TO THE SURFACE OF AGGREGATE BASE PRIOR TO PLACEMENT OF NEW ASPHALT CONCRETE.
7. TACK COAT SS-1 ASPHALTIC EMULSION CONFORMING TO SECTIONS 37 AND 94 OF THE STATE STANDARD SPECIFICATIONS SHALL BE APPLIED AT THE RATE OF 0.05± TO 0.10± GALLONS PER SQUARE YARD TO EXISTING ASPHALT CONCRETE SURFACES AND VERTICAL SURFACES PRIOR TO PLACEMENT OF NEW ASPHALT CONCRETE.
8. FOG SEAL COAT OF ASPHALTIC EMULSION AND WATER CONFORMING TO SECTIONS 37 AND 94 OF THE STATE STANDARD SPECIFICATIONS SHALL BE APPLIED TO FINISH PAVING WHEN COMPLETE AND PRIOR TO STRIPING.
9. PORTLAND CEMENT CONCRETE SHALL CONFORM TO CLASS B, WITH A MINIMUM 28 DAY COMPRESSIVE STRENGTH OF 3000 PSI.
10. GRADE BREAKS ON ASPHALT CONCRETE AND PORTLAND CEMENT CONCRETE SHALL BE ROUNDED OFF DURING FORM WORK AND/OR FINISHED SURFACING TO THE SATISFACTION OF THE OWNER/ENGINEER.
11. CURB AND GUTTER SUBGRADE TOP 6 INCHES SHALL BE COMPACTED TO A MINIMUM 95% RELATIVE COMPACTION.
12. REFER TO LANDSCAPE PLANS FOR ARCHITECTURAL TREATMENT OF PORTLAND CEMENT CONCRETE. ALL PCC PAVEMENT SECTION THICKNESS SHOWN SHALL BE BASED ON NET THICKNESS WHICH EXCLUDES INDENTATION FOR ARCHITECTURAL PURPOSES.
13. CONTRACTOR SHALL ADJUST ALL INLETS, VALVE BOXES, MONITORING WELLS AND OTHER UTILITY STRUCTURES WHICH ARE TO REMAIN TO THE NEW FINISH GRADE.

SUBSURFACE NOTES

1. STRUCTURAL FILL SHALL BE COMPACTED TO THE
2. RECOMMENDATIONS IN THE PROJECT GEOTECHNICAL REPORT.
3. ON-SITE TRENCH BACKFILL SHALL BE COMPACTED TO THE RECOMMENDATIONS IN THE PROJECT GEOTECHNICAL REPORT.

REGISTERED PROFESSIONAL ENGINEER
MITCHEL W. BURLEY
No. 57874
Exp. 6-30-20
CIVIL
STATE OF CALIFORNIA

NOTIFICATION

1. IF ANY DAMAGE OCCURS TO AN UNDERGROUND FACILITY THAT RESULTS IN THE ESCAPE OF ANY FLAMMABLE, TOXIC OR CORROSIVE GAS OR LIQUID OR ENDANGERS LIFE, HEALTH, OR PROPERTY, THE CONTRACTOR SHALL IMMEDIATELY NOTIFY THE UTILITY OWNER AND CALL THE 911 EMERGENCY TELEPHONE NUMBER TO NOTIFY LOCAL PUBLIC SAFETY OFFICIALS.
2. THE CONTRACTOR SHALL PROVIDE THE NAME AND TELEPHONE NUMBER OF THE AUTHORIZED REPRESENTATIVE (SUPERINTENDENT) OF THE WORK TO THE CITY IN WRITING PRIOR TO THE START OF WORK.
3. CONTRACTOR SHALL REFERENCE CITY STANDARD PLANS AND SPECIFICATIONS FOR ALL WORK IN THE PUBLIC RIGHT-OF-WAY, UNLESS OTHERWISE NOTED.

CITY OF SANTA CRUZ WATER DEPARTMENT

STANDARD CONSTRUCTION NOTES

1. ALL WORK ON THE WATER SYSTEM SHALL BE IN CONFORMANCE WITH THE CITY OF SANTA CRUZ WATER SYSTEM STANDARD SPECIFICATIONS AND DETAILS DECEMBER 2009 REVISION.
2. THE CONTRACTOR SHALL SUBMIT AT LEAST 2 COPIES OF THE PROJECT SCHEDULE AND SUBMITTALS FOR ALL MATERIALS THAT WILL BECOME THE PROPERTY OF SCWD. DELIVER TO THE PROJECT ENGINEER PRIOR TO START OF CONSTRUCTION AND WITH SUFFICIENT TIME TO VERIFY COMPLIANCE: 212 LOCUST STREET, SUITE C SANTA CRUZ, CA 95060.
3. THE CONTRACTOR SHALL SUBMIT THE CONTACT INFORMATION FOR AND IF REQUIRED, PROVIDE THE QUALIFICATIONS OF AN INDEPENDENT GEOTECHNICAL ENGINEERING FIRM QUALIFIED TO CONDUCT COMPACTION TESTING. THE MINIMUM COMPACTION TEST FREQUENCY SHALL BE ONCE EVERY 50 LINEAL FEET IN EACH BACKFILL TYPE, EXCEPT CLSM. ALL COSTS ASSOCIATED WITH SUCH TESTING AND POSSIBLE RETESTING OF FAILED AREAS OR AREAS THAT HAVE BEEN RE-EXCAVATED SUBSEQUENT TO INITIAL TESTING, SHALL BE BORNE BY THE CONTRACTOR. DOCUMENTATION OF TEST RESULTS SHALL BE SUBMITTED TO INSPECTOR WITHIN 24 HOURS OF TESTING.
4. A MINIMUM OF TWO WORKING DAYS ADVANCED NOTICE SHALL BE GIVEN TO THE CITY OF SANTA CRUZ WATER DEPARTMENT (SCWD) BEFORE CONSTRUCTION ON ANY PORTION OF THE WATER SYSTEM. A MINIMUM OF TWO WORKING DAYS WRITTEN NOTICE SHALL BE GIVEN TO ALL CUSTOMERS IN THE AREA OF CONSTRUCTION PRIOR TO COMMENCEMENT OF WORK. NOTIFICATION DOOR HANGERS WILL BE PROVIDED BY SCWD TO BE DISTRIBUTED BY THE CONTRACTOR.
5. A MINIMUM OF THREE WORKING DAYS ADVANCED NOTICE SHALL BE GIVEN TO THE SCWD IN ORDER TO SCHEDULE A SHUT DOWN OF THE SYSTEM. VALVES CONNECTED TO THE EXISTING SYSTEM SHALL BE OPERATED BY SCWD PERSONNEL ONLY. CONTRACTOR SHALL PRE-DIG SYSTEM CONNECTION LOCATIONS SUFFICIENTLY IN ADVANCE OF SCHEDULED SHUTDOWN TO VERIFY EXISTING CONDITIONS AND OBTAIN EXACT MATERIALS NEEDED TO COMPLETE THE CONNECTION IN ORDER TO REDUCE THE POSSIBILITY OF A PROLONGED OR FALSE SHUTDOWN. SCWD SHALL NOT BE HELD RESPONSIBLE FOR CONSTRUCTION DELAYS DUE TO INABILITY TO OBTAIN A COMPLETE SHUTDOWN.
6. THE CONTRACTOR SHALL PROVIDE ALL NECESSARY EQUIPMENT FOR PRESSURE AND LEAKAGE TESTING. SCWD WILL PROVIDE MATERIAL AND EQUIPMENT AND PERFORM THE INITIAL DISINFECTION AND WATER QUALITY TESTING OF THE PIPELINE. MAINLINE CHLORINATION MUST BE SCHEDULED FOR A MONDAY OR TUESDAY MORNING DUE TO LABORATORY TESTING CONSTRAINTS.
7. A SERVICE TO BE "RENEWED" SHALL CONSIST OF INSTALLING NEW COPPER SERVICE PIPE FROM THE NEW MAIN TO THE METER. A SERVICE TO BE "RECONNECTED" SHALL CONSIST OF CONNECTING NEW COPPER SERVICE PIPE FROM THE NEW MAIN TO THE EXISTING SERVICE LINE. UNDER NO CIRCUMSTANCE SHALL COPPER SERVICES BE CRIMPED AS A METHOD OF RECONNECTION.
8. NO EXISTING SERVICES SHALL BE RECONNECTED UNTIL THE NEW MAIN HAS BEEN FLUSHED, HYDROSTATICALLY TESTED, DISINFECTED, HAS PASSED ALL WATER QUALITY TESTING, AND HAS BEEN TIED INTO THE SYSTEM.
9. ALL VALVES AND FITTINGS (EXCEPT TRANSITION COUPLINGS AT SYSTEM CONNECTIONS) SHALL HAVE RESTRAINTS INCORPORATED INTO THE JOINTS AND FOR ALL OTHER JOINTS WITHIN A DISTANCE OF SUCH FITTING AS DEFINED BY STANDARD DETAIL #18.
10. MINIMUM SEPARATION FROM OTHER PARALLEL AND CROSSING UTILITIES SHALL BE MAINTAINED PER CALIFORNIA CODE OF REGULATIONS. IF CONDITIONS REQUIRE CONSTRUCTION AT CLEARANCES LESS THAN THOSE PRESCRIBED BY CALIFORNIA CODE, APPROVAL FROM THE CALIFORNIA DEPARTMENT OF PUBLIC HEALTH SHALL BE OBTAINED PRIOR TO PROCEEDING.
11. CONTRACTOR SHALL EXPOSE THE CORPORATION STOPS AND PROVIDE A MINIMUM OF TWO WORKING DAYS NOTICE TO SCWD TO SCHEDULE SHUTOFF AND INSPECTION OF EXISTING SERVICE LINES TO BE RETIRED ON A MAIN TO REMAIN IN SERVICE. CONTRACTOR SHALL REMOVE METER BOXES AND RESTORE SIDEWALK AND PAVING. SERVICE LINES SHALL NOT BE CRIMPED AS A METHOD OF RETIREMENT.
12. EXISTING VALVES TO BE RETIRED MUST HAVE OPEN/CLOSE STATUS BE CONFIRMED BY SCWD PRIOR TO THE VALVE BOX REMOVAL, THE HOLE BACKFILLED WITH SLURRY-CEMENT OR CONCRETE, AND PAVEMENT TO MATCH EXISTING.
13. EXACT FIRE HYDRANT LOCATIONS MUST BE APPROVED BY THE APPLICABLE FIRE DEPARTMENT, PUBLIC WORKS DEPARTMENT, AND SCWD PRIOR TO INSTALLATION.
14. UTILITY LOCATIONS SHOWN ARE APPROXIMATE AND EXISTING UTILITIES AND UNDERGROUND STRUCTURES MAY NOT BE SHOWN. LOCATION OF EXISTING UTILITIES IS THE RESPONSIBILITY OF THE CONTRACTOR AND SHALL BE VERIFIED PRIOR TO THE SAWCUT AND EXCAVATION FOR INSTALLATION OF THE NEW FACILITY TO CONFIRM CONSTRUCTABILITY IN THE PROPOSED ALIGNMENT. IF DURING THE COURSE OF WORK, THE CONTRACTOR ENCOUNTERS ANY EXISTING UTILITIES OR OTHER CONFLICTING STRUCTURES THAT FORCE THE REALIGNMENT OF THE NEW PIPELINE AT A DIFFERENT GRADE, OR REQUIRE OTHER MINOR ALTERATIONS, SUCH RELAYING OR MINOR ALTERATIONS WILL BE MADE AT NO ADDITIONAL EXPENSE TO THE CITY. CALL UNDERGROUND SERVICE ALERT AT LEAST TWO WORKING DAYS BEFORE DIGGING AT 811/ (800) 227-2600. ALWAYS CONFIRM STATUS AND SAFETY OF SUSPECTED ABANDONED FACILITIES PRIOR TO REMOVAL.
15. SHOULD ANY UTILITY OR PROPERTY BE DAMAGED BY THE OPERATIONS OF THE CONTRACTOR, IMMEDIATELY NOTIFY THE OWNER AND THE WATER DEPARTMENT. ANY NON-PRESSURIZED SEWER OR DRAINAGE PIPELINES OR ABANDONED FACILITIES ARE NOT REQUIRED TO BE MARKED. DAMAGE TO NON-PRESSURIZED SEWER OR DRAINAGE PIPELINES DURING THE COURSE OF WORK IS SOLELY THE RESPONSIBILITY OF THE CONTRACTOR.
16. THE CONTRACTOR SHALL KEEP THE CONSTRUCTION SITE IN A NEAT AND CLEAN CONDITION AT ALL TIMES. ALL TRASH AND EXCESS EXCAVATED MATERIAL SHALL BE REMOVED FROM THE SITE AS NEEDED AND AT THE END OF EACH WORK DAY. STREET AREAS SHALL BE SWEPT AS NEEDED AND AT THE END OF EACH WORK DAY. IF DUST PROBLEMS SHOULD OCCUR, DUST CONTROL SHALL BE PROVIDED BY THE CONTRACTOR AT CONTRACTOR'S EXPENSE AND TO THE SATISFACTION OF THE SCWD AND OTHER REGULATORY AGENCIES.
17. CONTRACTOR SHALL KEEP ON SITE AND READY AT ALL TIMES DURING CONSTRUCTION ALL EQUIPMENT AND MATERIALS NEEDED TO BE IMPLEMENTED TO ENSURE THE PROTECTION OF ALL SURFACE WATER BODIES AND SEWER AND STORM DRAIN SYSTEMS FROM RUNOFF WHICH MAY BE CONTAMINATED BY SEDIMENT, SAWCUT SLURRY OR OTHER POLLUTION IN THE EVENT OF EMERGENCY WATER FACILITY BREAKAGE, TRENCH DEWATERING ACTIVITY, OR WET WEATHER EVENT THAT MAY ERODE STOCKPILES OR EXPOSED SOIL AREAS.
18. APPROVAL BY THE CITY OF SANTA CRUZ WATER DEPARTMENT FOR THE FIRE SERVICE INSTALLATION SHALL ONLY BE FOR THE SERVICE LINE LOCATION AND THE CONNECTION TO THE CITY WATER SYSTEM. THE FIRE SERVICE SIZE AND DESIGN APPROVAL ARE THE RESPONSIBILITY OF THE LOCAL FIRE PROTECTION AGENCY.
19. CONTRACTOR SHALL COMPLY WITH ALL CURRENT FEDERAL, STATE AND LOCAL LAWS, STANDARDS, AND REGULATORY AGENCY REQUIREMENTS CONCERNING THE HANDLING OF ASBESTOS CONTAINING MATERIALS. CONTRACTOR SHALL SUBMIT A COPY OF ALL RELAVANT CAL/OSHA DOCUMENTATION, AND DOCUMENTED WORKER TRAINING TO CITY PRIOR TO HANDLING ANY ASBESTOS CONTAINING MATERIALS. ASBESTOS DISTURBANCE AND/OR REMOVAL ACTIVITIES SHALL BE CONDUCTED BY PROPERLY TRAINED, ACCREDITED, AND LICENSED PERSONNEL USING PROPER PROTECTIVE EQUIPMENT. TRANSITE PIPE SHALL BE CUT ONLY WITH A SNAP TYPE CUTTER IN A POSTED REGULATED AREA AND NEVER WITH AN ABRASIVE SAW. FIELD CUT TRANSITE PIPE ENDS SHALL NOT BE RE-BEVELED. REMOVE ALL DISTURBED ASBESTOS CONTAINING MATERIALS AS INTACT AS POSSIBLE AND IMMEDIATELY SEAL IN LEAK-TIGHT SIX MIL THICK POLY WRAP WITH PROPER LABELING. CONTRACTOR SHALL SUBMIT A COPY OF THE NON-HAZARDOUS WASTE MANIFEST TO CITY TO DOCUMENT PROPER DISPOSAL.

BKF 100+ YEARS
ENGINEERS . SURVEYORS . PLANNERS
1730 NORTH FIRST ST., SUITE 600
SAN JOSE, CA 95112
(408) 467-9100
www.bkf.com

RIVERFRONT PROJECT
412, 418, 428, 440, 504, AND 508 FRONT STREET
CONSTRUCTION NOTES
SANTA CRUZ — SANTA CRUZ COUNTY — CALIFORNIA

No.	Revisions

Date 05/20/19
Scale
Design MWB
Drawn .
Approved .
Job No 20176131

Drawing Number: **C1.2**

2 OF **13**

DRAWING NAME: K:\2017\176131_Riverfront_Apt_Santa_Cruz\ENG\BASE_FILES\RFCIVILPLANS01.dwg
PLOT DATE: 05-20-19 PLOTTED BY: BUR

© BKF Engineers

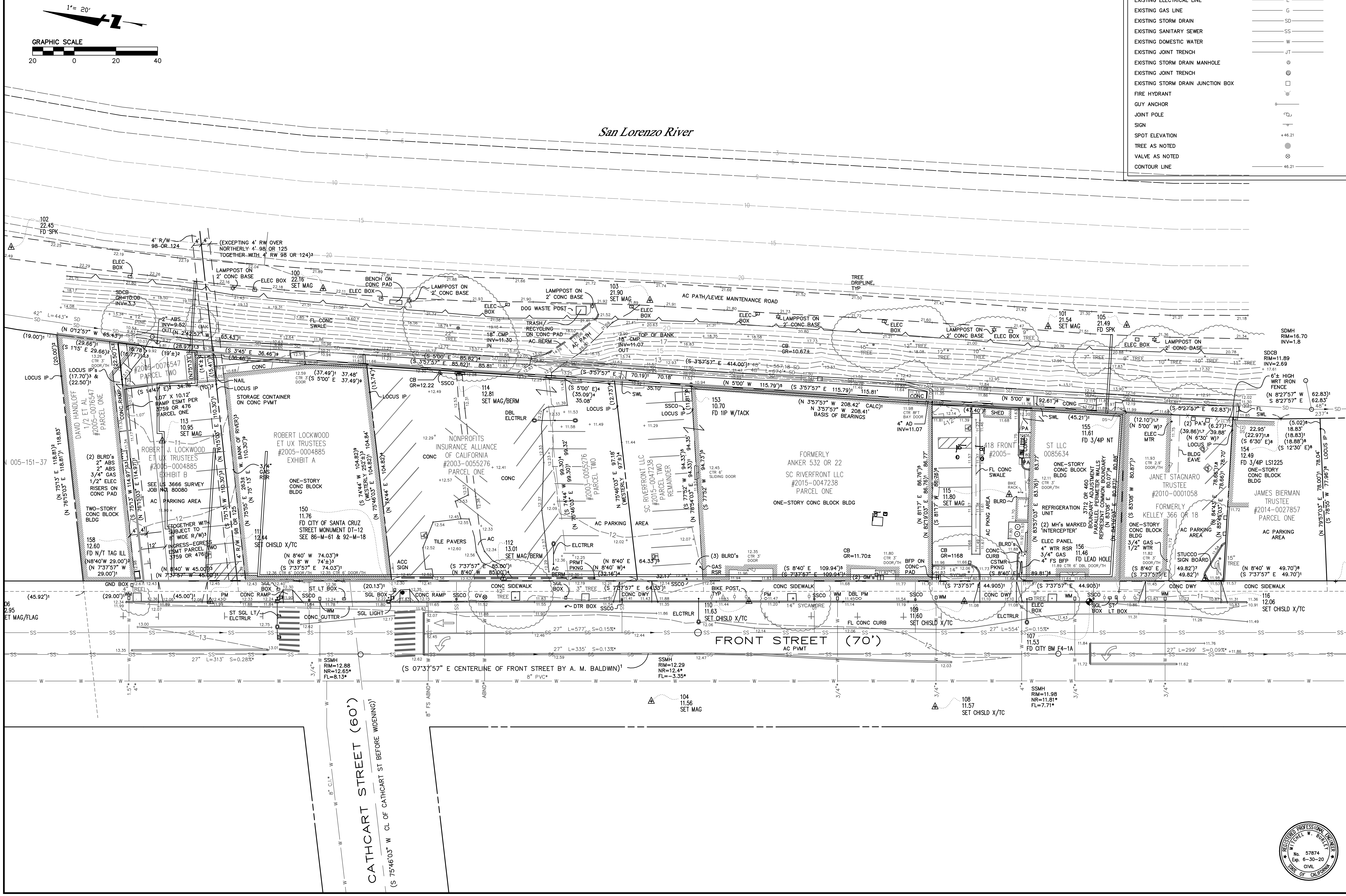

LEGEND

PROPERTY LINE	
(E) WOOD FENCE	X X
EXISTING EASEMENT	
EXISTING ELECTRICAL LINE	E
EXISTING GAS LINE	G
EXISTING STORM DRAIN	SD
EXISTING SANITARY SEWER	SS
EXISTING DOMESTIC WATER	W
EXISTING JOINT TRENCH	JT
EXISTING STORM DRAIN MANHOLE	
EXISTING JOINT TRENCH	
EXISTING STORM DRAIN JUNCTION BOX	
FIRE HYDRANT	
GUY ANCHOR	
JOINT POLE	
SIGN	
SPOT ELEVATION	+46.21
TREE AS NOTED	
VALVE AS NOTED	
CONTOUR LINE	46.21

BKF 100+ YEARS
ENGINEERS . SURVEYORS . PLANNERS
1730 NORTH FIRST ST., SUITE 600
SAN JOSE, CA 95112
(408) 467-9100
www.bkf.com

RIVERFRONT PROJECT
412, 418, 428, 440, 504, AND 508 FRONT STREET
EXISTING CONDITION PLAN

SANTA CRUZ SANTA CRUZ COUNTY CALIFORNIA

Revisions

No.

Date 05/20/19
Scale 1" = 20'
Design MWB
Drawn .
Approved .
Job No 20176131

REGISTERED PROFESSIONAL ENGINEER MITCHEL W. BURLEY No. 57874 Exp. 6-30-20 CIVIL STATE OF CALIFORNIA

Drawing Number:
C2.1
3 OF 13

© BKF Engineers

DEMOLITION KEY NOTES

1. EXISTING TREE TO BE REMOVED, SEE LANDSCAPE PLANS.
2. EXISTING SANITARY SEWER LINE TO BE REMOVED. CAP LINE AS SHOWN PER SANTA CRUZ STANDARDS.
3. EXISTING 2" WATER SERVICE TO BE RETIRED PER SANTA CRUZ WATER DISTRICT STANDARD SPECIFICATIONS (CUT & CAP AT WATER MAIN).
4. EXISTING FIRE SERVICE TO BE RETIRED PER SANTA CRUZ WATER DISTRICT STANDARD SPECIFICATIONS (CUT & CAP AT WATER MAIN).
5. EXISTING UTILITY BOX/VAULT TO BE PROTECTED IN PLACE.
6. REMOVE EXISTING DRIVEWAY.
7. EXISTING TRAFFIC SIGNAL POLE/BOX TO BE PROTECTED IN PLACE.
8. EXISTING CITY MONUMENT TO BE PROTECTED IN PLACE.
9. EXISTING STREET TREE TO BE PROTECTED IN PLACE.
10. EXISTING ELECTROLIER TO BE PROTECTED IN PLACE.
11. EXISTING 48" STORM DRAIN MAIN TO BE PROTECTED IN PLACE.

GENERAL NOTES

1. COORDINATE REMOVALS WITH PROPOSED BUILDING AND UTILITY PLANS.
2. ITEMS SHOWN TO BE REMOVED ARE INDICATED PER BEST INFORMATION AVAILABLE TO THE ENGINEER. IT IS THE INTENTION OF THESE PLANS TO REMOVE ALL EXISTING UTILITIES AND IMPROVEMENTS, UNLESS OTHERWISE NOTED, TO ALLOW CONSTRUCTION OF THE PROPOSED IMPROVEMENTS, WHETHER INDICATED ON THE PLAN OR NOT, AND TO ALLOW FUTURE GRADING AND CONSTRUCTION OF IMPROVEMENTS TO OCCUR. CONTRACTOR SHALL FAMILIARIZE HIMSELF WITH THE SITE PRIOR TO BID.
3. CONTRACTOR IS RESPONSIBLE FOR ACQUIRING ALL PERMITS AND AUTHORIZATIONS REQUIRED TO COMPLETE THE PLANNED DEMOLITION.
4. IT SHALL BE THE RESPONSIBILITY OF THE CONTRACTOR TO IDENTIFY, LOCATE AND PROTECT ALL UNDERGROUND FACILITIES TO REMAIN.
5. THE PERMITEE SHALL MAINTAIN THE STREETS AND SIDEWALKS IN A CLEAN, SAFE AND USABLE CONDITION. ALL SPILLS OF OIL, ROCK OR CONSTRUCTION DEBRIS SHALL BE REMOVED FROM THE PROPERTY DURING CONSTRUCTION AND UPON COMPLETION OF THE PROJECT. ALL ADJACENT PROPERTY, PRIVATE OR PUBLIC, SHALL BE MAINTAINED IN A CLEAN, SAFE AND USABLE CONDITION.
6. THE LOCATION AND DEPTHS OF EXISTING UNDERGROUND IMPROVEMENTS ARE SHOWN IN THEIR APPROXIMATE POSITIONS BASED UPON INFORMATION AVAILABLE TO THE ENGINEER. ACTUAL LOCATIONS MAY VARY. ACCURATE VERIFICATION AS TO SIZE, LOCATION AND DEPTH OF EXISTING UNDERGROUND FACILITIES SHALL BE THE RESPONSIBILITY OF THE CONTRACTOR. THE ENGINEER IS NOT RESPONSIBLE FOR ANY EXISTING UTILITIES NOT SHOWN ON THE PLANS.

LEGEND

- PROPERTY LINE
- TREE TO BE REMOVED
- REMOVE ASPHALT AND BASEROCK
- REMOVE EXISTING BUILDING, FOUNDATION, AND BASEROCK
- REMOVE CONCRETE PAVEMENT AND BASEROCK (INCLUDES CURB, GUTTER, WALKWAYS, FOUNDATION AND ETC.)

1"= 20'

GRAPHIC SCALE

20 0 20 40

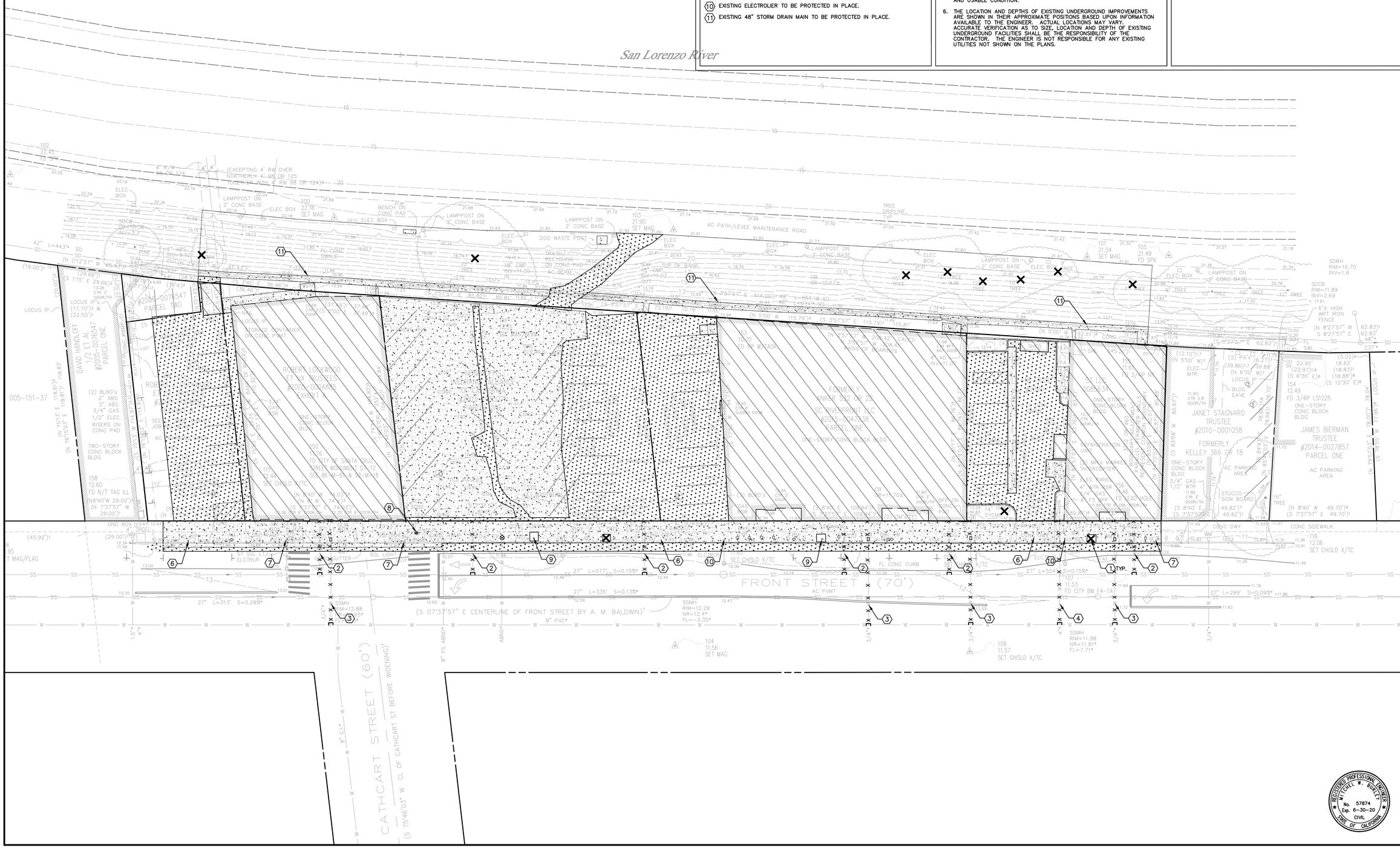

BKF 100+ YEARS
1730 NORTH FIRST ST., SUITE 600
SAN JOSE, CA 95112
(408) 467-9100
www.bkf.com
ENGINEERS . SURVEYORS . PLANNERS

RIVERFRONT PROJECT
412, 418, 428, 440, 504, AND 508 FRONT STREET
DEMOLITION PLAN

SANTA CRUZ COUNTY, CALIFORNIA

Revisions

No.	

Date 05/20/19
Scale 1" = 20'
Design MWB
Drawn .
Approved .
Job No 20176131

REGISTERED PROFESSIONAL ENGINEER MITCHEL W. BURLEY No. 57874 Exp. 6-30-20 CIVIL STATE OF CALIFORNIA

Drawing Number:
C3.1

DRAWING NAME: K:\2017\176131_Riverfront_Apt_Santa_Cruz\ENG\BASE_FILES\RFCIVILPLANS01.dwg
PLOT DATE: 05-20-19 PLOTTED BY: BUR

© BKF Engineers

GENERAL NOTES

1. CONTRACTOR SHALL REMOVE AND REPAIR ALL DAMAGED CURB, GUTTER, AND SIDEWALK ALONG THE PROPERTY FRONTAGE AND REPLACE IN KIND PER CITY STANDARD DETAIL 8, SHEET C10.2.

CONSTRUCTION KEY NOTES

1. CONSTRUCT DRIVEWAY APPROACH PER CITY OF SANTA CRUZ STANDARDS, SEE SHEET C10.2.
2. INSTALL DETECTABLE WARNING PER DETAIL 3, SHEET C10.0.
3. CONSTRUCT VERTICAL CURB & GUTTER AND SIDEWALK PER CITY OF SANTA CRUZ STANDARDS. SEE SHEET C10.2.
4. CONCRETE AC PAVEMENT CONFORM
5. EDGE STRIPING AT THE 8-FOOT WIDTH MARK OF 12 FOOT WIDE, PAVED LEVEE PATH

LEGEND

PROPERTY LINE

VERTICAL CURB AND GUTTER

RETAINING WALL (SEE STRUCTURAL PLANS)

AC PAVEMENT

CONCRETE PAVEMENT

1" = 20'

GRAPHIC SCALE

20 0 20 40

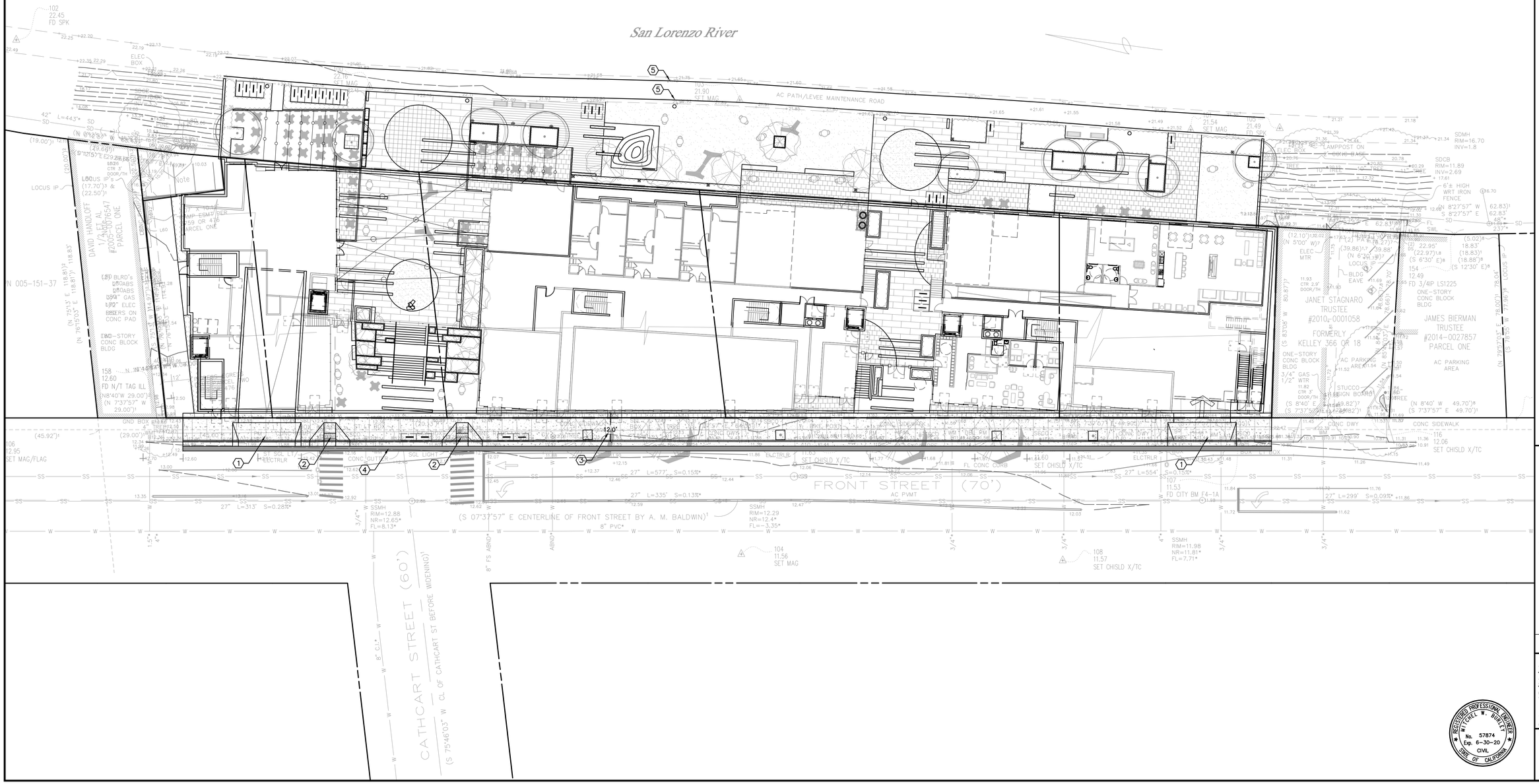

BKF 100+ YEARS
1730 NORTH FIRST ST., SUITE 600
SAN JOSE, CA 95112
(408) 467-9100
www.bkf.com
ENGINEERS . SURVEYORS . PLANNERS

RIVERFRONT PROJECT
412, 418, 428, 440, 504, AND 508 FRONT STREET
SITE PLAN

SANTA CRUZ COUNTY, CALIFORNIA

SANTA CRUZ

Revisions

No.	

Date 05/20/19
Scale 1" = 20'
Design MWB
Drawn .
Approved .
Job No 20176131

Drawing Number:
C4.1
5 OF 13

REGISTERED PROFESSIONAL ENGINEER MITCHEL W. BURLEY No. 57874 Exp. 6-30-20 CIVIL STATE OF CALIFORNIA

DRAWING NAME: K:\2017\176131_Riverfront_Apt_Santa_Cruz\ENG\BASE_FILES\RFCIVILPLANS01.dwg
PLOT DATE: 05-20-19 PLOTTED BY: BUR

© BKF Engineers

1" = 20'

GRAPHIC SCALE

20 0 20 40

GENERAL NOTES

1. FINISHED GRADE AT LANDSCAPED AREAS ADJACENT TO THE BUILDING SHALL BE MINIMUM 8" BELOW FINISH FLOOR.
2. LANDSCAPED FINISHED GRADES AROUND THE PERIMETER OF BUILDING SHOULD BE COMPACTED AND SLOPED AT A 3% MIN. GRADIENT AWAY FROM FOUNDATION.
3. ALL PAVED AREAS ARE TO SLOPE A MINIMUM OF 0.5% AND MAXIMUM OF 8% ACCESSIBLE STALLS AND LOADING ZONES ARE TO SLOPE AT A MAXIMUM OF 2% IN ALL DIRECTIONS. ACCESSIBLE PATHWAYS ARE TO SLOPE AT A MAXIMUM OF 4.9% IN THE DIRECTION OF TRAVEL AND THE SLOPE CROSSWAYS TO THE DIRECTION OF TRAVEL SHALL BE AT A MAXIMUM OF 2%.
4. CONTRACTOR SHALL REMOVE AND REPAIR ALL DAMAGED CURB, GUTTER, AND SIDEWALK ALONG THE PROPERTY FRONTAGE PER CITY DIRECTION AND REPLACE IN KIND PER CITY STANDARD DETAIL 8, SHEET C10.2.

LEGEND

DIRECTION OF FLOW (HARDSCAPE)	
DIRECTION OF FLOW (LANDSCAPE)	
STORM DRAIN JUNCTION BOX	SDJB
STORM DRAIN CLEAN OUT	SDCO
STORM DRAIN AREA DRAIN	AD
STORM DRAIN CATCH BASIN/OVERFLOW DRAIN	CB/OFD
STORM DRAIN INLET	DI
TRENCH DRAIN	
SANITARY SEWER MANHOLE	SSMH
SANITARY SEWER CLEANOUT	SSCO
OVERLAND STORM DRAIN RELEASE	
FF STEP	

LEGEND

PROPERTY LINE	
VERTICAL CURB & GUTTER	
RETAINING WALL	
DIRECTION OF FLOW	
FINISH FLOOR ELEVATION	FF 36.05
TOP OF CURB ELEVATION	TC 36.05
FINISHED GRADE ELEVATION	FG 36.05
FLOW LINE ELEVATION ELEVATION	FL 36.05
TOP OF WALL	TW 36.05
BOTTOM OF WALL/BACK OF WALK	BW 36.05
HIGH POINT	HP
LOW POINT	LP
PAVEMENT ELEVATION	PV 36.05

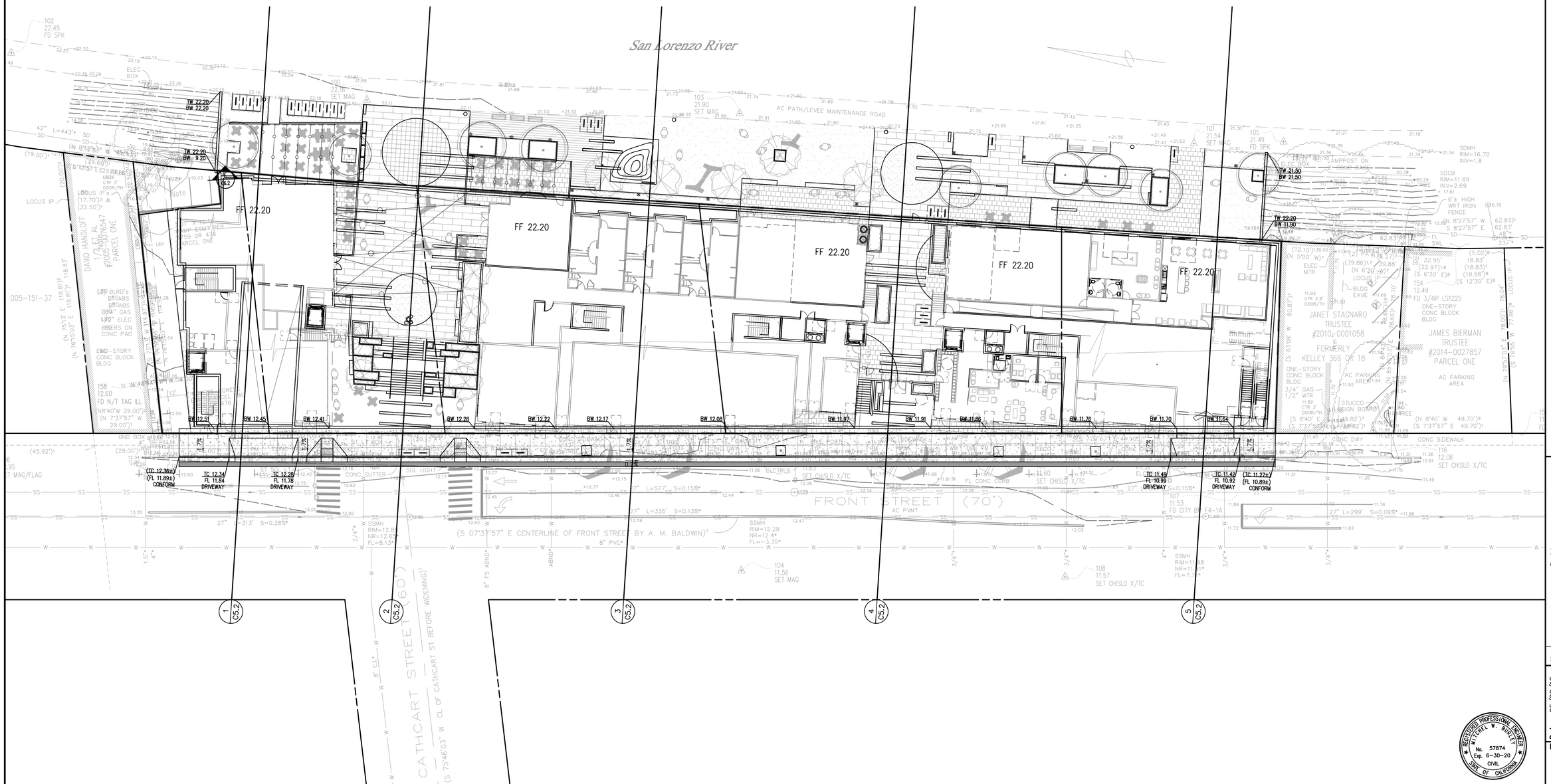

DRAWING NAME: K:\2017\176131_Riverfront_Apt_Santa_Cruz\ENG\BASE_FILES\RFCIVILPLANS01.dwg
PLOT DATE: 05-20-19 PLOTTED BY: BUR

BKF 100+ YEARS
1730 NORTH FIRST ST., SUITE 600
SAN JOSE, CA 95112
(408) 467-9100
www.bkf.com
ENGINEERS . SURVEYORS . PLANNERS

RIVERFRONT PROJECT
412, 418, 428, 440, 504, AND 508 FRONT STREET
GRADING PLAN
SANTA CRUZ COUNTY CALIFORNIA

SANTA CRUZ

Revisions

No.	

Date 05/20/19
Scale 1" = 20'
Design MWB
Drawn .
Approved .
Job No 20176131

REGISTERED PROFESSIONAL ENGINEER MITCHEL W. BAILEY No. 57874 Exp. 6-30-20 CIVIL STATE OF CALIFORNIA

Drawing Number:
C5.1

6 OF 13

© BKF Engineers

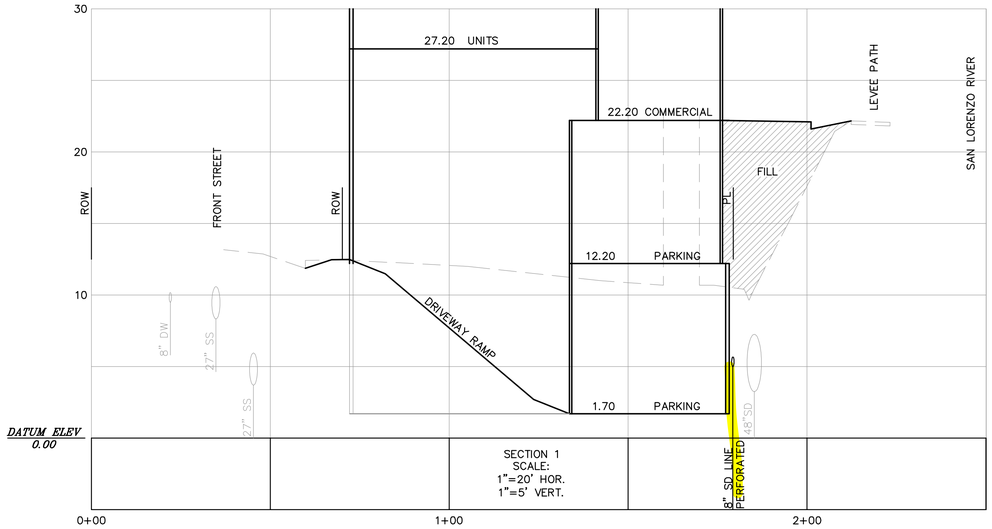

SECTION 1
SCALE:
1"=20' HOR.
1"=5' VERT.

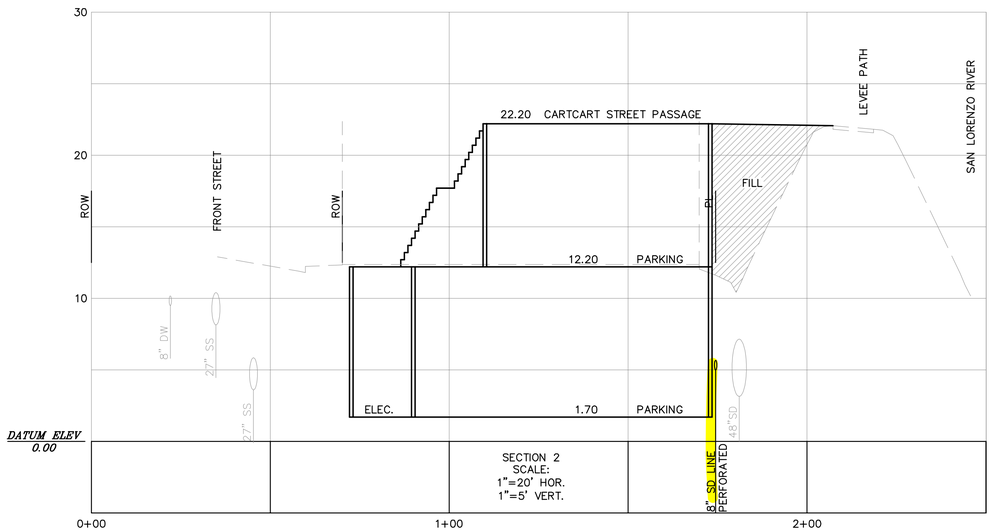

SECTION 2
SCALE:
1"=20' HOR.
1"=5' VERT.

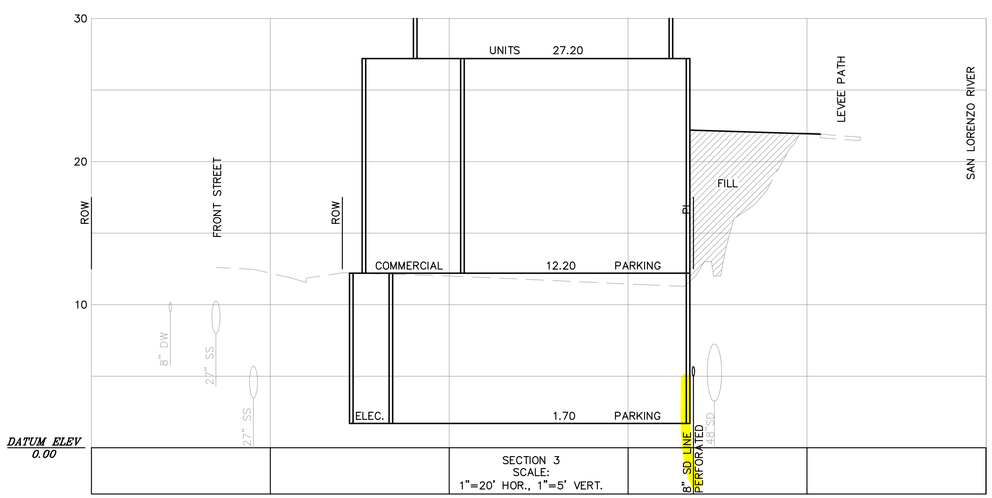

SECTION 3
SCALE:
1"=20' HOR., 1"=5' VERT.

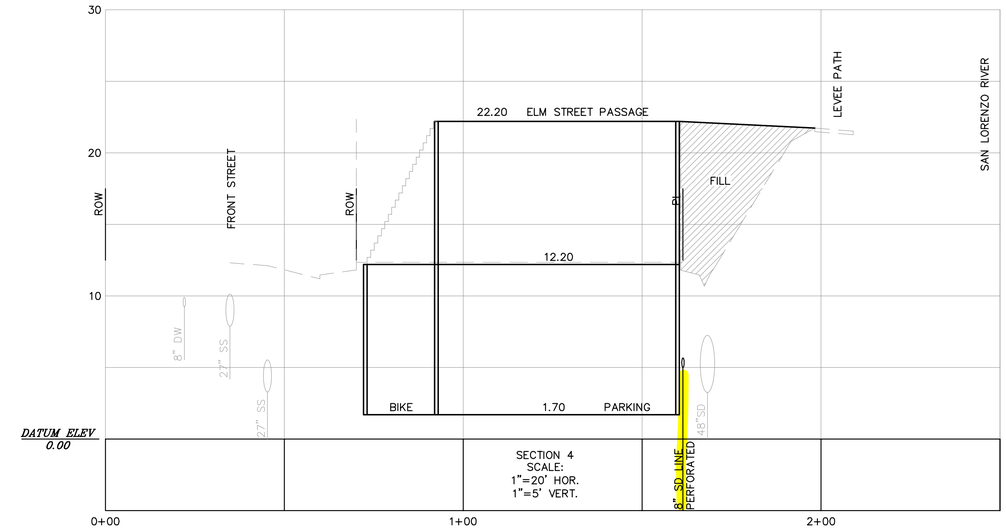

SECTION 4
SCALE:
1"=20' HOR.
1"=5' VERT.

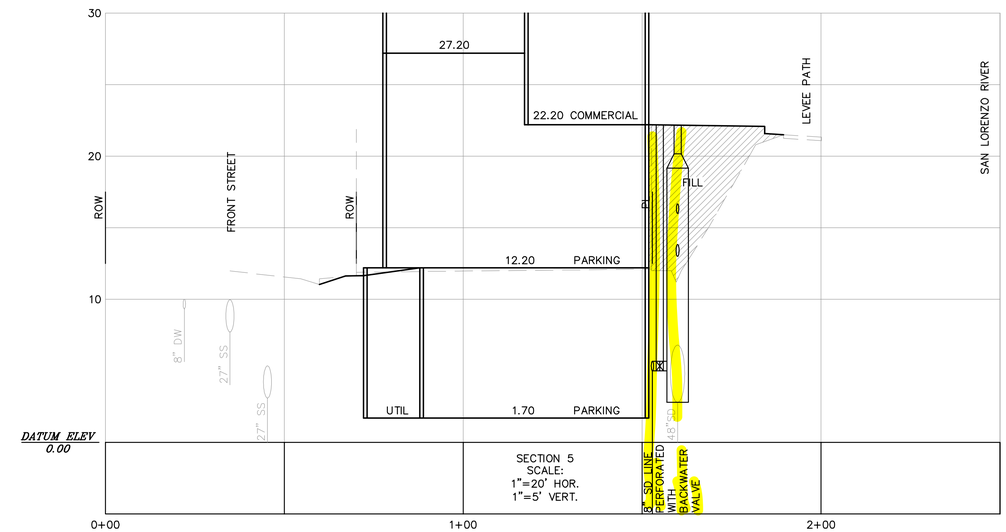

SECTION 5
SCALE:
1"=20' HOR.
1"=5' VERT.

BKF 100+ YEARS
1730 NORTH FIRST ST., SUITE 600
SAN JOSE, CA 95112
(408) 467-9100
www.bkf.com
ENGINEERS . SURVEYORS . PLANNERS

RIVERFRONT PROJECT
412, 418, 428, 440, AND 508 FRONT STREET
SITE SECTIONS
SANTA CRUZ COUNTY CALIFORNIA

Revisions

No.	

Date 05/20/19
Scale 1" = 20'
Design MWB
Drawn .
Approved .
Job No 20176131

REGISTERED PROFESSIONAL ENGINEER MITCHEL W. BUSLEY No. 57874 Exp. 6-30-20 CIVIL STATE OF CALIFORNIA

Drawing Number:
C5.2
7 OF 13

DRAWING NAME: K:\2017\176131_Riverfront_Apt_Santa_Cruz\ENG\BASE_FILES\RFC\VILPLANS01.dwg
PLOT DATE: 05-20-19 PLOTTED BY: BUR

© BKF Engineers

GENERAL NOTES

1. ALL SEWER PIPES SHALL BE INSTALLED PER SANTA CRUZ STANDARD DETAIL 1, SHEET C10.2.

CONSTRUCTION KEY NOTES

6. NEW 8" FIRE SERVICE (TO SERVE FIRE SPRINKLERS ONLY) INSTALLATION WITH A SCWD APPROVED DOUBLE-CHECK DETECTOR ASSEMBLY BACKFLOW DEVICE INSTALLATION AS PER SCWD DETAIL 9.
7. NEW 4" DOMESTIC WATER SERVICE INSTALLATION WITH A SCWD APPROVED REDUCED PRESSURE BACKFLOW DEVICE AND WATER METER AS PER SCWD DETAIL 6.
8. INSTALL CHRISTY G05 VALVE BOX AND G05C LID PER SANTA CRUZ WATER SYSTEM STANDARD SPECIFICATIONS.

CONSTRUCTION KEY NOTES

1. INSTALL 12"x12" STORM DRAIN JUNCTION BOX PER DETAIL 7, SHEET C10.1.
2. INSTALL STORM DRAIN TREATMENT MANHOLE PER DETAIL 7, SHEET C10.1.
3. INSTALL SANITARY SEWER CLEANOUT & LATERAL PER SANTA CRUZ STANDARD DETAIL 2, SHEET C10.2. SEE PLUMBING PLANS FOR CONTINUATION INTO THE BUILDING.
4. INSTALL AREA DRAIN PER DETAIL 10, SHEET C10.1.
5. INSTALL SANITARY SEWER MANHOLE PER SANTA CRUZ STANDARD DETAILS.

LEGEND

FIRE HYDRANT/FIRE DEPT. CONNECTION	FH/FDC
REDUCED PRESSURE BACKFLOW DEVICE	
DOUBLE-CHECK DETECTOR ASSEMBLY	
WATER VALVE	WV
CHECK VALVE	CV
WATER METER	WM

LEGEND

PROPERTY LINE	
CURB AND GUTTER	
SANITARY LINE	10" SDR 26 PVC SS
OVERFLOW STORM DRAIN LINE (TREATED)	12" HDPE
STORM DRAIN LINE (UNTREATED)	6"/8" HDPE SD
TRENCH DRAIN	
WATER LINE	8" W
GAS LINE	G
JOINT TRENCH	JT
AREA DRAIN	AD
SANITARY SEWER MANHOLE	SSMH
SANITARY SEWER CLEANOUT	SSCO
STORM DRAIN MANHOLE	SDMH
STORM DRAIN CLEAN OUT	SDCO
STORM DRAIN CATCH BASIN/DRAIN INLET	CB/DI
STORM DRAIN JUNCTION BOX	SDJB

1"= 20'

GRAPHIC SCALE

20 0 20 40

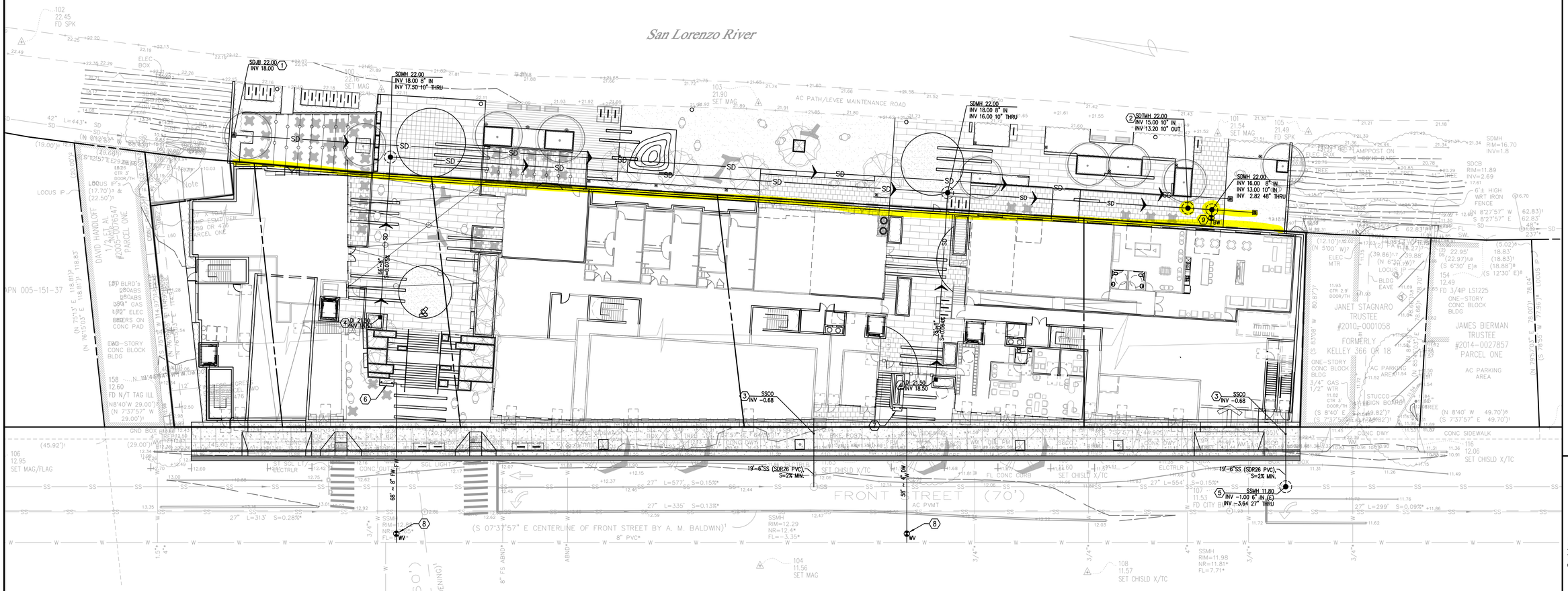

BKF 100 YEARS
1730 NORTH FIRST ST., SUITE 600
SAN JOSE, CA 95112
(408) 467-9100
www.bkf.com
ENGINEERS . SURVEYORS . PLANNERS

RIVERFRONT PROJECT
412, 418, 428, 440, 504, AND 508 FRONT STREET
UTILITY PLAN

SANTA CRUZ COUNTY CALIFORNIA

SANTA CRUZ

Revisions

No.	

Date 05/20/19
Scale 1" = 20'
Design MWB
Drawn .
Approved .
Job No 20176131

REGISTERED PROFESSIONAL ENGINEER MICHAEL W. BUSKEY No. 57874 Exp. 6-30-20 CIVIL STATE OF CALIFORNIA

Drawing Number:
C6.1

DRAWING NAME: K:\2017\176131_Riverfront_Apt_Santa_Cruz\ENG\BASE_FILES\RFC\VI\PLANS01.dwg
PLOT DATE: 05-20-19 PLOTTED BY: BUR

© BKF Engineers

TABLE 1

TREATMENT CONTROL MEASURE SUMMARY TABLE

DRAINAGE AREAS	DRAINAGE AREA SIZE (SQ. FT.)	PERVIOUS SURFACE (SQ. FT.)	TYPE OF PERVIOUS SURFACE	IMPERVIOUS SURFACE (SQ. FT.)	TYPE OF IMPERVIOUS SURFACE	WATER QUANTITY (FLOW AND/OR VOLUME GENERATED)		PROPOSED TREATMENT CONTROLS	CONFORMS TO SIZE STANDARD?
						REQUIRED	PROVIDED		
A-1	15,493	2,082	LANDSCAPE	13,411	CONCRETE	545 SF	638 SF	SCM-1 BIORETENTION BASIN 1	YES
A-2	42,884	0	N/A	42,884	ROOF CONCRETE	0.18 CFS	0.21 CFS	SCM-2 PERK FILTER MANHOLE 1	YES

TABLE 2

TIER 3 SIMPLE METHOD CALC		
	0.865	=total imperv (13411 sf)/total lot size (15493 sf)
C	0.682	=(0.858*I^3)-(0.78*I^2)+(0.774*I)+0.04
Rainfall depth, d (ft)	0.167	=2"/12 Santa Cruz 95TH percentile - WMZ1, 4 & 10
Tributary Area, A (sf)	6706	0.5*Replaced imperv (13411 sf)

Retention Volume (cf)	**762**	=C*d*A
Retention Volume - void ratio included (cf)	**1906**	=Volume/0.4
Area of Basin Required (sf)	**545**	= 4% (total imperv+0.1*total perv)
Area of Basin Provided (sf)	**638**	= Area of basin required
Depth of Rock (ft)	**3.0**	=Retention volume/Area of basin provided

NOTES:
1. CALCULATIONS WERE DONE PER CHAPTER 6B OF THE BEST MANAGEMENT PRACTICES MANUAL FOR THE CITY'S STORM WATER MANAGEMENT PROGRAM.
2. THE PROJECT RUNOFF DISCHARGES INTO 48" CITY STORM DRAIN LINE, AND OUTFALLS DIRECTLY INTO THE SAN LORENZO RIVER, THEREFORE THIS PROJECT IS NOT SUBJECT TO TIER 4 REQUIREMENTS: PEAK MANAGEMENT.
3. MAINTENANCE ACCESS TO SCM-1 AND SCM-2 SHALL BE AVAILABLE FROM SAN LORENZO RIVER LEVEE TRAIL DRIVEWAY AT SOQUEL AVENUE.

LEGEND

- PROJECT PROPERTY LINE
- RETAINING WALL
- DRAINAGE RELEASE PATH
- CATCH BASIN
- AREA DRAIN
- DRAINAGE MANAGEMENT AREA BOUNDARY — A-X
- STORMWATER CONTROL MEASURE — SCM-#
- STORM DRAIN LINE (UNTREATED) — SD
- TRENCH DRAIN

1" = 20'

GRAPHIC SCALE

20 0 20 40

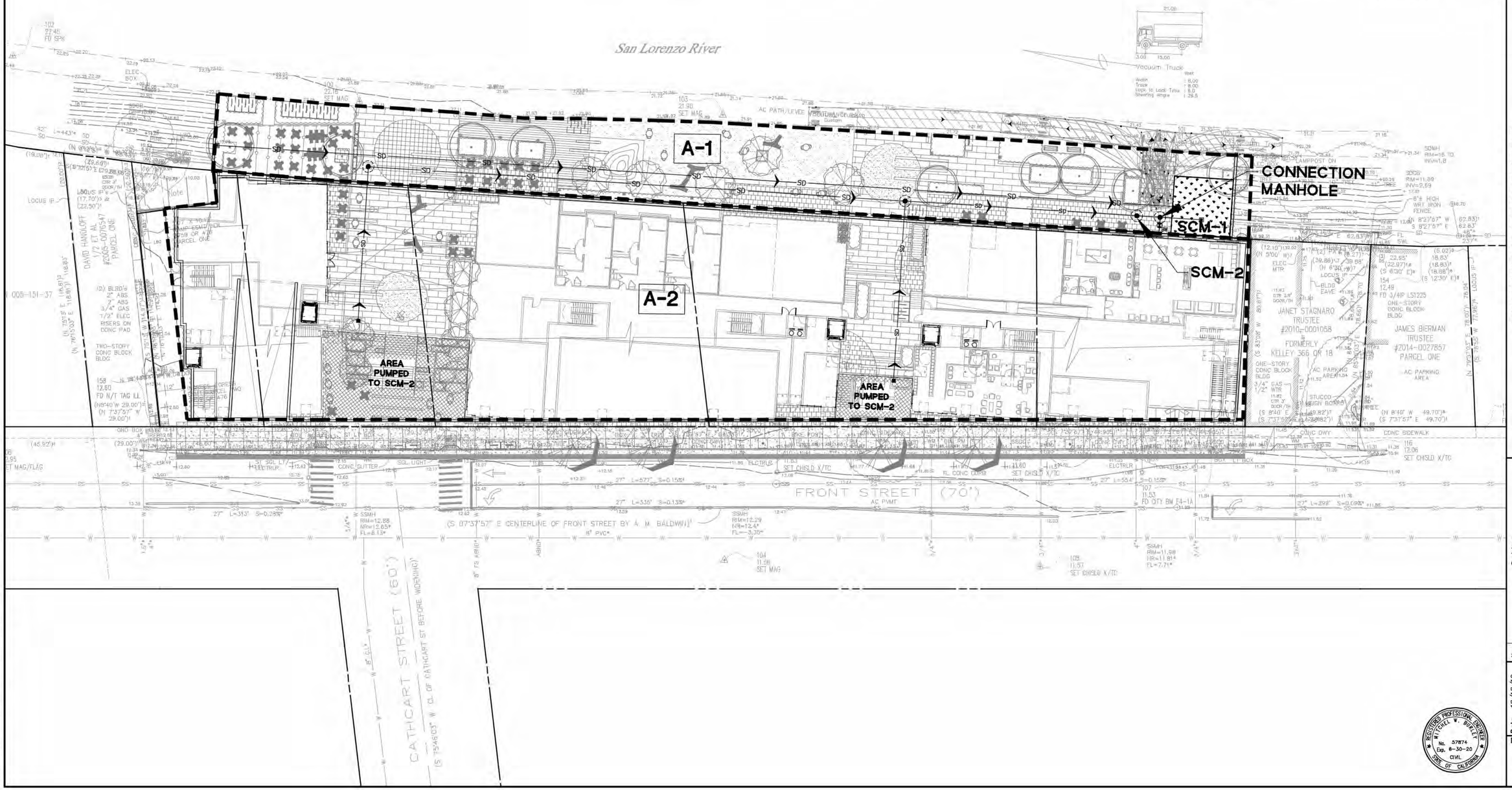

BKF 100+ YEARS
1730 NORTH FIRST ST., SUITE 800
SAN JOSE, CA 95112
(408) 467-9100
www.bkf.com
ENGINEERS . SURVEYORS . PLANNERS

RIVERFRONT PROJECT
412, 418, 428, 440, 504, AND 508 FRONT STREET
STORMWATER CONTROL PLAN

SANTA CRUZ COUNTY, CALIFORNIA

Revisions | No.

Date 10/10/19
Scale 1" = 20'
Design MWB
Drawn
Approved
Job No 20176131

Drawing Number:
C7.1
9 OF 13

REGISTERED PROFESSIONAL ENGINEER MITCHEL W. BURLEY No. 57874 Exp. 6-30-20 CIVIL STATE OF CALIFORNIA

DRAWING NAME: K:\2017\176131_Riverfront_Apt_Santa_Cruz\ENG\BASE_FILES\RFC\VILPLANS01.dwg
PLOT DATE: 10-10-19 PLOTTED BY: BUR

© BKF Engineers

EROSION CONTROL NOTES

17. ADDITIONAL EROSION CONTROL MEASURES MAY BE REQUIRED BY THE OWNER AND/OR THE CALIFORNIA REGIONAL WATER CONTROL BOARD (CRWQCB) BASED ON FIELD REVIEWS OF THE SITE.
18. DAMAGED EROSION CONTROL DEVICES SHALL BE REPAIRED OR REPLACED BY THE CONTRACTOR AS SOON AS PRACTICAL AFTER THE DAMAGE OCCURS.
19. ALL EXPOSED DISTURBED SURFACES SHALL BE HYDROSEEDED WITH BROME SEED SPREAD AT THE RATE OF 5 POUNDS PER 1000 SQUARE FEET, OR APPROVED EQUAL. SEEDING AND WATERING SHALL BE MAINTAINED AS REQUIRED TO ENSURE GROWTH. HYDROSEEDED AREAS SHALL THEN BE COVERED WITH STRAW MULCH AND STABILIZED BY CRIMPING OR THE APPLICATION OF A LIQUID TACKIFIER.
20. DURING GRADING OPERATIONS, THE SITE SHALL BE WATERED ON A DAILY BASIS WITH MINIMAL WATER AND NO RUNOFF TO STORM DRAIN SYSTEM TO MINIMIZE THE RELEASE OF DUST AND OTHER PARTICULATE MATTER.
21. EARTHWORK SHALL NOT BE PERFORMED DURING UNFAVORABLE CONDITIONS. AFTER INTERRUPTION OF WORK DUE TO HEAVY RAIN, THE ENGINEER SHALL APPROVE EARTHWORK BEFORE RESUMPTION OF EARTHMOVING OPERATIONS.
22. CONTRACTOR SHALL BE RESPONSIBLE TO PUT IN PLACE THE NECESSARY MEANS AND EXECUTE PROPER METHODS TO PROTECT EARTHWORK AGAINST UNFAVORABLE WEATHER CONDITIONS. CONTRACTOR SHALL NOT BE PAID FOR ANY DELAY OR ADDITIONAL WORK TO REMEDY PREVIOUS EARTHWORK RESULTING FROM THE CONTRACTOR'S NEGLIGENCE TO PROTECT THE SITE.
23. IT IS THE CONTRACTOR'S RESPONSIBILITY TO COMPLETE AND SUBMIT THE ANNUAL COMPLIANCE STATUS REPORT OF THE CONSTRUCTION STORM WATER GENERAL PERMIT ON THE SEPTEMBER 1ST OF EACH YEAR THE PROJECT IS IN CONSTRUCTION.
24. THIS PROJECT SHALL COMPLY WITH APPLICABLE PROVISIONS IN THE STATE OF CALIFORNIA GENERAL PERMIT FOR STORMWATER DISCHARGES, ORDER NO. 2009-0009-DWQ.
25. SITE CONSTRUCTION ENTRANCE & EXIT: CHECK THE SIDEWALK AND STREET DAILY DURING THE DEMOLITION AND CONSTRUCTION PHASES FOR SOIL OR SEDIMENT DRAG-OUT, AND SWEEP IF NEEDED.

EROSION CONTROL NOTES

9. ALL TRUCK TIRES SHALL BE CLEANED PRIOR TO EXITING THE PROPERTY.
10. THE CONTRACTOR SHALL IMPLEMENT BEST MANAGEMENT PRACTICES FOR CONSTRUCTION ACTIVITIES AS REQUIRED BY THE CALIFORNIA REGIONAL WATER QUALITY CONTROL BOARD (CRWQCB).
11. DURING PERIODS WHEN STORMS ARE FORECAST:
    a. EXCAVATED SOILS MAY NOT BE PLACED IN THE STREETS OR ON PAVED AREAS.
    b. ANY EXCAVATED SOILS SHOULD BE REMOVED FROM THE SITE BY THE END OF THE DAY.
    c. WHERE STOCKPILING IS NECESSARY, USE A TARPAULIN OR SURROUND THE STOCKPILED MATERIAL WITH FIBER ROLLS, SILT FENCE, OR OTHER RUNOFF CONTROLS.
    d. USE INLET CONTROLS (E.G. FILTER MAT) FOR STORM DRAINS ADJACENT TO STOCKPILED SOIL.
    e. THOROUGHLY SWEEP ALL PAVED AREAS EXPOSED TO SOIL EXCAVATION AND PLACEMENT.
12. DURING PERIODS WHEN STORMS ARE NOT FORECAST –
    a. PREVENT STOCKPILED MATERIAL FROM ENTERING THE STORM DRAIN SYSTEM.
    b. THOROUGHLY REMOVE LOOSE SOIL VIA SWEEPING FOLLOWING REMOVAL OF DIRT.
13. THIS EROSION CONTROL PLAN IS FOR CONSTRUCTION YEAR ROUND. OPEN SPACE AREAS ARE TO BE PLANTED BY SEPTEMBER 15 (BEFORE RAINY SEASON). IF THESE CONDITIONS ARE NOT MET, CONTRACTOR SHALL SUBMIT AN EROSION CONTROL PLAN TO THE PROJECT ENGINEER THAT REFLECTS CURRENT SITE CONDITIONS FOR REVIEW AND APPROVAL.
14. EROSION CONTROL MEASURES SHOWN ON THIS PLAN SHALL BE MAINTAINED REPAIRED AND REPLACED AFTER EACH SIGNIFICANT RAINFALL OR AS DIRECTED BY THE CITY OF SANTA CRUZ AND/OR THE CALIFORNIA REGIONAL WATER CONTROL BOARD (CRWQCB).
15. ALL DRAINAGE INLETS WITHIN AND NEAR THE PROJECT SITE SHALL BE PROVIDED WITH SEDIMENT TRAPS OR SEDIMENT BARRIERS AS PER THIS PLAN.
16. SEDIMENT DAMS AND TRAPS SHALL BE CHECKED FOR SEDIMENT ACCUMULATION AFTER EACH SIGNIFICANT RAINFALL. SEDIMENT SHALL BE REMOVED FROM THESE DEVICES WHEN IT HAS ACCUMULATED TO THREE-QUARTER OF THE ORIGINAL STORAGE HEIGHT

EROSION CONTROL NOTES

1. SHEET C8.0 & C8.1 ARE INTENDED TO BE USED FOR EROSION CONTROL ONLY.
2. THIS PLAN MAY NOT COVER ALL THE SITUATIONS THAT ARISE DURING CONSTRUCTION DUE TO UNANTICIPATED FIELD CONDITIONS. IN GENERAL, THE CONTRACTOR IS RESPONSIBLE FOR KEEPING ANY SEDIMENT FROM LEAVING THE SITE. FIBER ROLLS, SAND BAGS, AND SILT FENCES SHALL BE USED BY THE CONTRACTOR ON AN AS NEEDED BASIS TO INHIBIT SILT FROM LEAVING THE SITE AND ENTERING THE STORM DRAIN SYSTEM. ALL EXISTING, TEMPORARY, OR PERMANENT CATCH BASINS SHALL USE ONE OF THE SEDIMENT BARRIERS SHOWN.
3. THE CONTRACTOR SHALL BE RESPONSIBLE FOR ALL COSTS INCURRED WITH ALL TEMPORARY AND PERMANENT EROSION AND SEDIMENT CONTROL MEASURE MAINTENANCE THROUGHOUT THE DURATION OF THE PROJECT.
4. THE CONTRACTOR WILL BE LIABLE FOR ANY AND ALL DAMAGES TO PUBLIC AND/OR PRIVATE OWNED AND MAINTAINED ROAD CAUSED BY THE CONTRACTOR'S GRADING ACTIVITIES, AND WILL BE RESPONSIBLE FOR THE CLEANUP OF ANY MATERIAL SPILLED ON ANY PUBLIC ROAD ON THE HAUL ROUTE. ADJACENT PUBLIC ROADS SHALL BE CLEANED AT THE END OF EACH WORKING DAY.
5. EROSION AND SEDIMENT CONTROL MEASURES SHALL BE OPERABLE YEAR ROUND OR UNTIL VEGETATION IS ESTABLISHED ON LANDSCAPED SURFACES.
6. DURING THE RAINY SEASON, ALL PAVED AREAS ARE TO BE KEPT CLEAR OF EARTH MATERIAL AND DEBRIS. THE SITE IS TO BE MAINTAINED SO AS TO MINIMIZE SEDIMENT-LADEN RUNOFF TO ANY STORM DRAIN SYSTEM.
7. ALL EROSION CONTROL FACILITIES MUST BE MONITORED AS REQUIRED BY THE CALIFORNIA REGIONAL WATER QUALITY CONTROL BOARD (CRWQCB). ALL SLOPES SHALL BE REPAIRED AS SOON AS POSSIBLE WHEN DAMAGED. CONSTRUCTION BEST MANAGEMENT PRACTICES (BMPS) – PROJECT CONSTRUCTION AND DEMOLITION ACTIVITIES SHALL COMPLY WITH THE CITY'S STORM WATER BEST MANAGEMENT PRACTICES FOR CONSTRUCTION. SEE THE CITY WEBSITE AT: HTTP://WWW.CITYOFSANTACRUZ.COM/HOME/SHOWDOCUMENT?DID=6031.
8. BORROW AND TEMPORARY STOCKPILES SHALL BE PROTECTED WITH APPROPRIATE EROSION CONTROL MEASURES (TARPS, FIBER ROLLS, SILT FENCES, ETC.) TO ENSURE SILT DOES NOT LEAVE THE SITE OR ENTER THE STORM DRAIN SYSTEM

LEGEND

- PROPERTY LINE
- FIBER ROLL; SEE DETAIL 1 ON SHEET C8.1
- X — X — TEMPORARY 6' CONSTRUCTION FENCE
- STABLIZED CONSTRUCTION ENTRANCE/EXIT SEE DETAIL 4 ON SHEET C8.1
- ENTRANCE/EXIT TIRE WASH SEE DETAIL 4 ON SHEET C8.1
- STORM DRAIN INLET PROTECTION, SEE DETAIL 3 ON SHEET C8.1
- INLET PROTECTION, SEE DETAIL 2 ON SHEET C8.1

1" = 20'

GRAPHIC SCALE

20 0 20 40

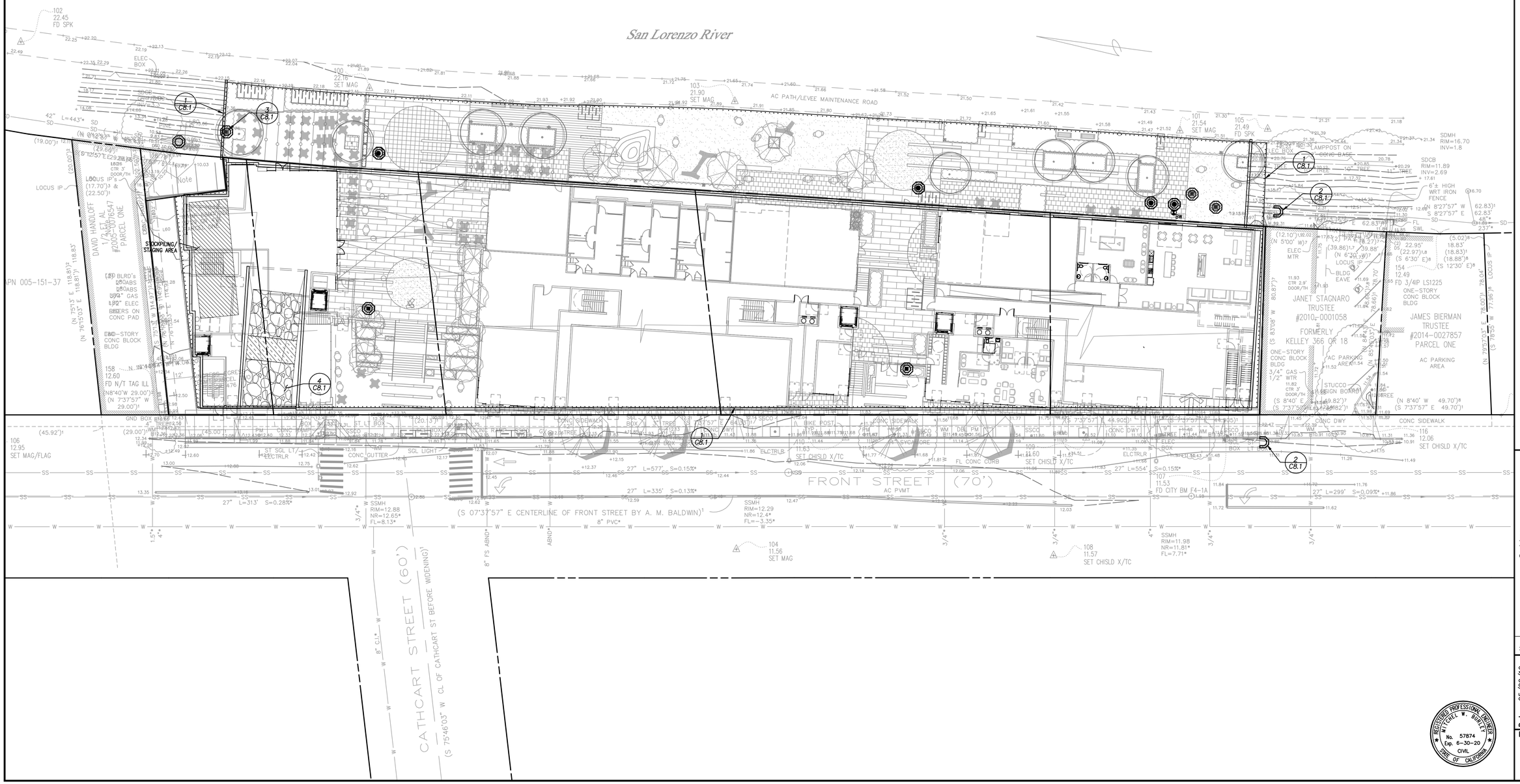

BKF 100 YEARS
1730 NORTH FIRST ST., SUITE 600
SAN JOSE, CA 95112
(408) 467-9100
www.bkf.com
ENGINEERS . SURVEYORS . PLANNERS

RIVERFRONT PROJECT
412, 418, 428, 440, 504, AND 508 FRONT STREET
EROSION CONTROL PLAN
SANTA CRUZ COUNTY CALIFORNIA

SANTA CRUZ

Revisions

No.	

Date 05/20/19
Scale 1" = 20'
Design MWB
Drawn .
Approved .
Job No 20176131

REGISTERED PROFESSIONAL ENGINEER MITCHEL W. BURLEY No. 57874 Exp. 6-30-20 CIVIL STATE OF CALIFORNIA

Drawing Number:
C8.1
10 OF 13

DRAWING NAME: K:\2017\176131_Riverfront_Apt_Santa_Cruz\ENG\BASE_FILES\RFCIVILPLANS01.dwg
PLOTTED BY: BUR
PLOT DATE: 05-20-19

© BKF Engineers

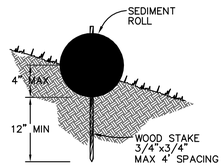

ENTRENCHMENT DETAIL IN SLOPE AREA

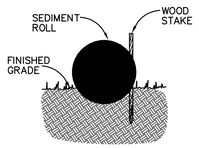

ENTRENCHMENT DETAIL IN FLAT AREA

NOTES:

1. USE REED & GRAHAM, INC. GEOSYNTHETICS STRAW WATTLE FIBER ROLL (COMES IN 9" X 25' ROLLS) OR APPROVED EQUIVALENT.
2. FIBER ROLL INSTALLATION REQUIRES THE PLACEMENT AND SECURE STAKING OF THE FIBER ROLL IN A TRENCH, 3" – 5" DEEP, DUG ON CONTOUR.
3. RUNOFF MUST NOT BE ALLOWED TO RUN UNDER OR AROUND FIBER ROLL. THE TOP OF THE STRUCTURE (PONDING HEIGHT) MUST BE WELL BELOW THE GROUND ELEVATION DOWNSLOPE TO PREVENT RUNOFF FROM BY-PASSING THE INLET.
4. EXCAVATION OF A BASIN ADJACENT TO THE DROP INLET OR A TEMPORARY DIKE ON THE DOWNSLOPE OF THE STRUCTURE MAY BE NECESSARY. IN PAVED AREAS, USE SAND BAGS TO SECURE FIBER ROLLS IN PLACE OF WOOD STAKE.

1 FIBER ROLL

SCALE: NTS

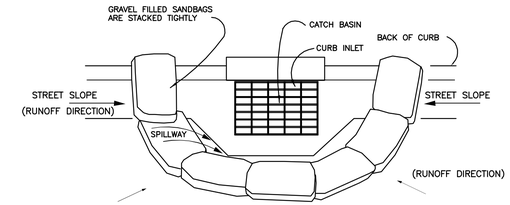

CURB INLET SEDIMENT BARRIER

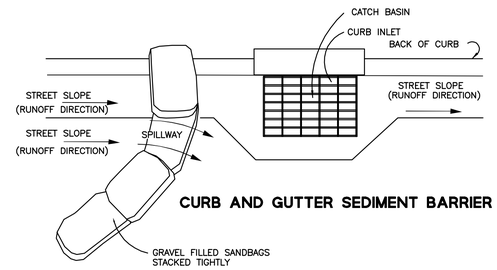

CURB AND GUTTER SEDIMENT BARRIER

NOTES:

1. PLACE CURB TYPE SEDIMENT BARRIERS ON GENTLY SLOPING STREETS, WHERE WATER CAN POND AND ALLOW SEDIMENT TO SEPARATE FROM RUNOFF.
2. SANDBAGS OF EITHER BURLAP OR WOVEN GEOTEXTILE FABRIC, ARE FILLED WITH GRAVEL, LAYERED AND PACKED TIGHTLY
3. LEAVE ONE SANDBAG GAP IN THE TOP ROW TO PROVIDE A SPILLWAY OVERFLOW. TOP OF SPILLWAY SHALL BE LOWER THAN TOP OF CURB.
4. INSPECT BARRIERS AND REMOVE SEDIMENT AFTER EACH STORM EVENT, SEDIMENT AND GRAVEL MUST BE REMOVED FROM THE TRAVELED WAY IMMEDIATELY.
5. REMOVE BAG AND FILTER FABRIC ONCE CONSTRUCTION IS COMPLETE.
6. INSTALL FILTREX SOX WITH MIRAFI FABRIC, APPROPRIATELY SIZED AND SECURED, UNDER THE STORM DRAIN INLET GRATE.

2 INLET PROTECTION (TYPE A)

SCALE: NTS

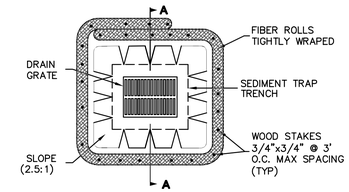

PLAN VIEW

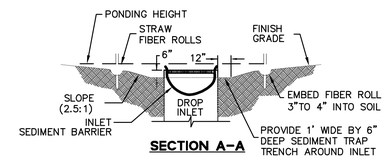

SECTION A–A

NOTE:

1. PLACE FIBER ROLLS AROUND THE INLET CONSISTENT WITH BASIN SEDIMENT BARRIER DETAIL ON THE SHEET. FIBER ROLLS ARE TUBES MADE FROM STRAW BOUND WITH PLASTIC NETTING. THEY ARE APPROXIMATELY 8" DIAMETER AND 20–30 FEET LONG.

3 INLET PROTECTION (TYPE B)

SCALE: NTS

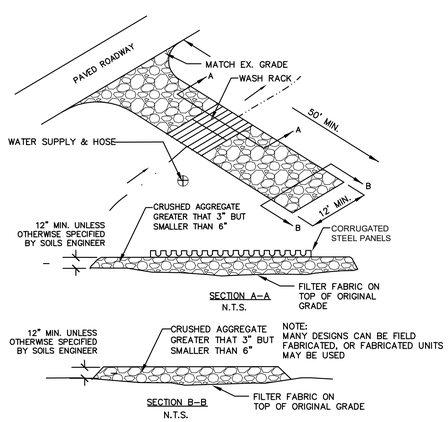

4 ENTRANCE / OUTLET TIRE WASH

SCALE: NTS

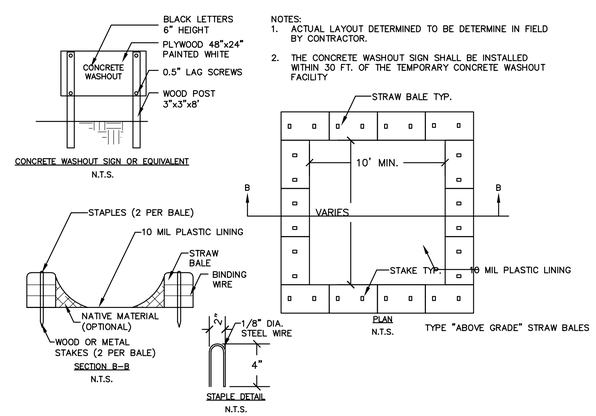

6 CONCRETE WASTE MANAGEMENT

SCALE: NTS

BKF 100 YEARS
1730 NORTH FIRST ST., SUITE 600
SAN JOSE, CA 95112
(408) 467-9100
www.bkf.com
ENGINEERS . SURVEYORS . PLANNERS

RIVERFRONT PROJECT
412, 418, 428, 440, 504, AND 508 FRONT STREET
EROSION CONTROL PLAN

SANTA CRUZ COUNTY, CALIFORNIA

SANTA CRUZ

Revisions

No.	

Date 05/20/19
Scale AS SHOWN
Design MWB
Drawn .
Approved .
Job No 20176131

REGISTERED PROFESSIONAL ENGINEER MITCHEL W. BUSELEY No. 57874 Exp. 6-30-20 CIVIL STATE OF CALIFORNIA

Drawing Number:
C8.2
11 OF 13

DRAWING NAME: K:\2017\176131_Riverfront_Apt_Santa_Cruz\ENG\BASE_FILES\RFC\VILPLANS01.dwg
PLOT DATE: 05-20-19 PLOTTED BY: BUR

© BKF Engineers

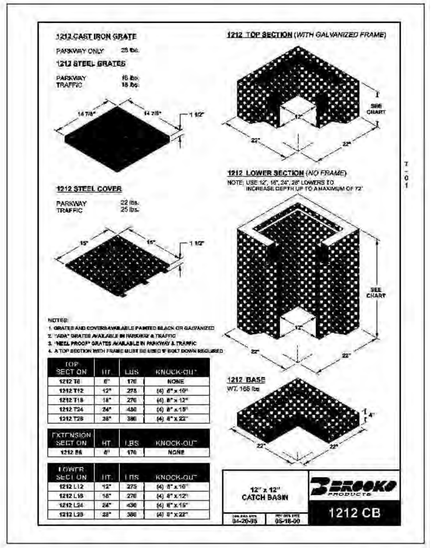

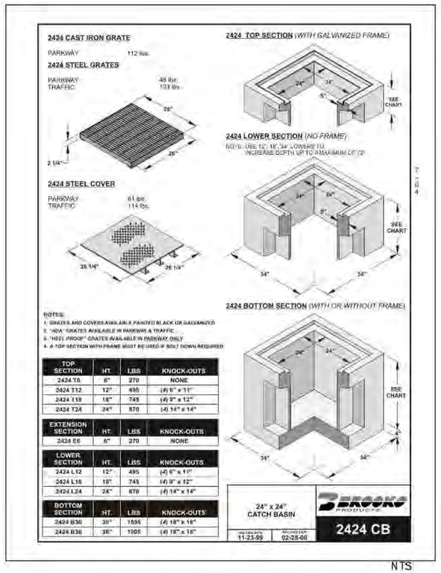

NTS

1 CATCH BASIN/ DROP INLET/ JUNCTION BOX DETAIL

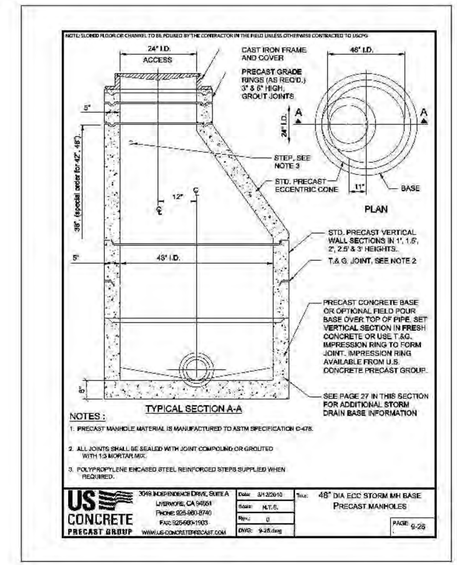

NTS

2 STORM DRAIN MANHOLE

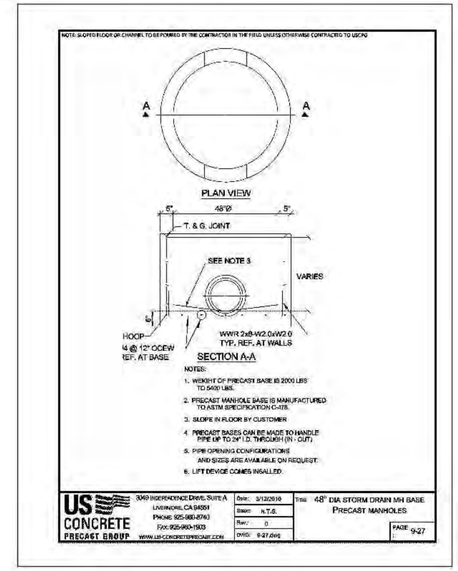

NTS

3 SDMH BASE

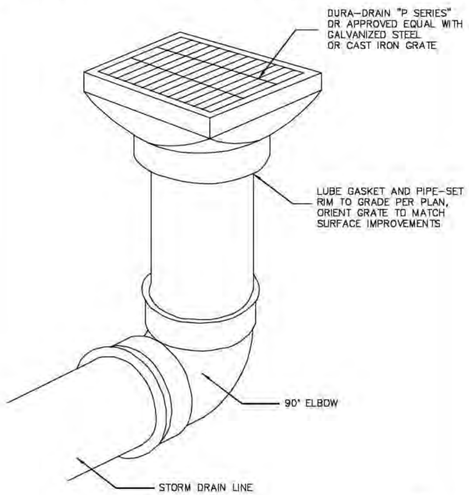

NTS

4 LANDSCAPE AREA DRAIN

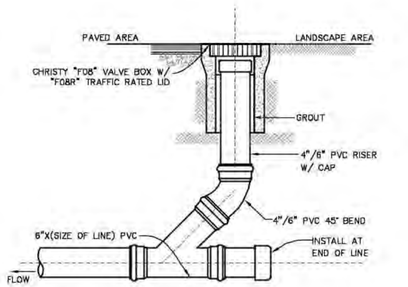

NTS

5 STORM DRAIN/SANITARY SEWER CLEANOUT

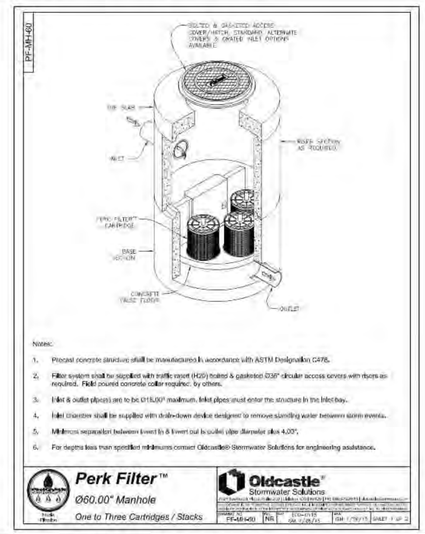

NTS

6 SD TREATMENT MANHOLE

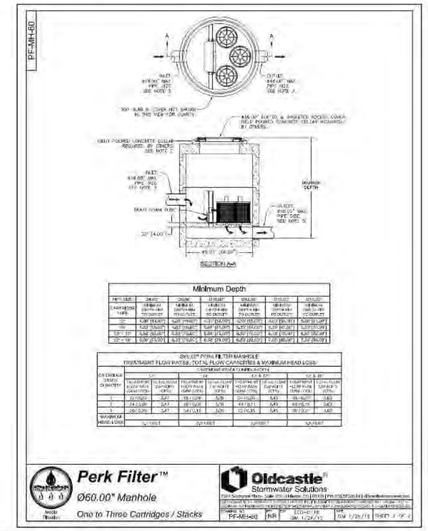

NTS

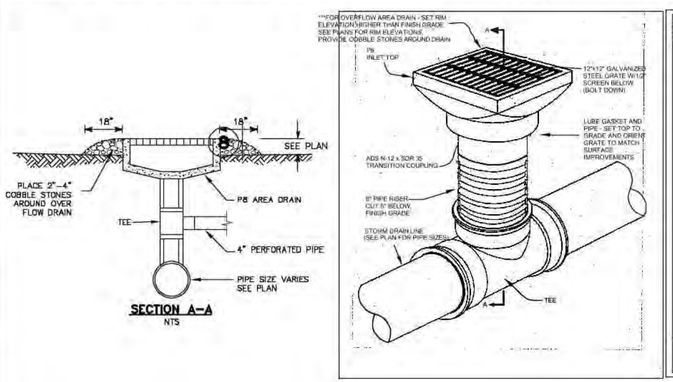

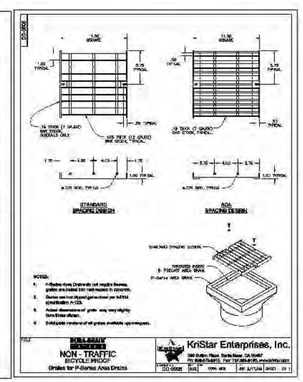

7 OVERFLOW DRAIN

NOTES

1. TREATMENT SOIL MIX SHALL MEET REQUIREMENTS AS SPECIFIED IN CHAPTER 6B OF THE BEST MANAGEMENT PRACTICES MANUAL FOR THE CITY OF SANTA CRUZ.
2. THE BIOTREATMENT SOIL MIX USED IN ALL BIORETENTION AREAS SHALL COMPLY WITH THE SPECIFICATIONS IN ATTACHMENT L OF THE RWQCB MUNICIPAL REGIONAL PERMIT. IF THE BIOTREATMENT SOIL MIX SUPPLIER IS INCLUDED ON SCVURPPP'S "BIOTREATMENT SOIL MIX SUPPLIER LIST" (SUPPLIER LIST), A BIOTREATMENT SOIL MIX SUPPLIER CERTIFICATION STATEMENT (CERTIFICATION STATEMENT) SHALL BE COMPLETED BY THE SUPPLIER AND SUBMITTED TO THE CITY/PROJECT ENGINEER A MINIMUM OF 14 DAYS PRIOR TO DELIVERY OF THE MATERIAL TO THE JOB SITE. IF THE BIOTREATMENT SOIL MIX SUPPLIER IS NOT INCLUDED ON THE SUPPLIER LIST, A BIOTREATMENT SOILS MIX VERIFICATION CHECKLIST (VERIFICATION CHECKLIST) SHALL BE COMPLETED BY THE SUPPLIER AND SUBMITTED TO THE CITY/PROJECT ENGINEER A MINIMUM OF 14 DAYS PRIOR TO DELIVERY OF THE MATERIAL TO THE JOB SITE. COPIES OF THE SUPPLIER LIST, CERTIFICATION STATEMENT AND VERIFICATION CHECKLIST CAN BE DOWNLOADED FROM THE COUNTYWIDE PROGRAM'S WEBSITE AT HTTP://WWW.SCVURPPP-W2K.COM/ND_WP.SHTML
3. PERFORATED PIPE SHALL BE SOLVENT WELD PVC SDR 35 (OR APPROVED EQUAL) WITH PERFORATIONS FACED DOWN. LOCATION OF THE PIPE VARIES, SEE PLAN.
4. FOR ANY LINER PENETRATIONS, RADIAL-CUT THE LINER FOR PIPE. MASTIC AND SEAL WITH PIPE CLAMP TO INSURE WATER-TIGHT SEAL.
5. MAINTAIN SPECIFIED DEPTH BENEATH PERFORATED PIPE.

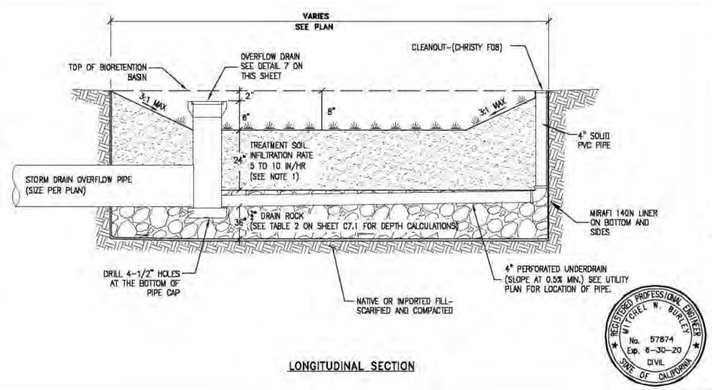

8 BIORETENTION BASIN DETAIL

BKF 100 YEARS
1730 NORTH FIRST ST., SUITE 800
SAN JOSE, CA 95112
(408) 467-9100
www.bkf.com
ENGINEERS . SURVEYORS . PLANNERS

RIVERFRONT PROJECT
412, 418, 428, 440, 504, AND 508 FRONT STREET
CIVIL DETAILS
SANTA CRUZ COUNTY, CALIFORNIA

Revisions: No.

Date 10/10/19
Scale AS SHOWN
Design MWB
Drawn
Approved
Job No 20178131

Drawing Number: C9.1

12 OF 13

DRAWING NAME: K:\2017\178131_Riverfront_Apt_Santa_Cruz\ENG\BASE_FILES\PFCIVILPLANS01.dwg
PLOT DATE: 10-10-19 PLOTTED BY: BUP

© BKF Engineers

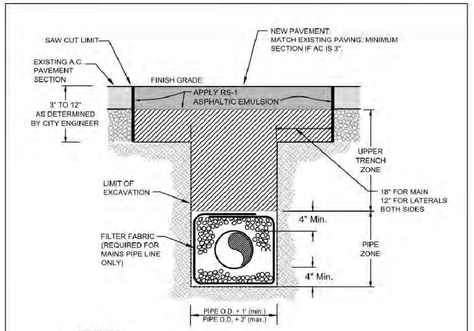

NOTES:

THIS DETAIL APPLIES TO ALL EXCAVATIONS IN CITY STREETS OR SIDEWALKS.

1. ***PIPE ZONE BACK FILL SHALL BE:***

   A. ¾" CRUSHED OR ANGULAR ROCK WITH 100% PASSING 1", 80-100% PASSING 3/4", 0-30% PASSING NO. 4 SIEVE, AND 0-10% PASSING NO. 8 SIEVE.

   B. ROCK SHALL BE ENVELOPED WITH FILTER FABRIC FOR MAIN PIPE ONLY.

2. ***UPPER TRENCH MATERIAL SHALL BE:***

   A. CLSM (2 SACK CEMENT SAND SLURRY); OR

   B. CLASS 2 AGGREGATE BASE PER CALTRANS SPECIFICATIONS.

   IF AGGREGATE BASE IS USED THE UPPER 2' SHALL BE COMPACTED TO 95% RELATIVE COMPACTION. REMAINING MATERIAL SHALL BE COMPACTED TO 90%. A CIVIL ENGINEER HIRED BY THE CONTRACTOR MUST CERTIFY THAT COMPACTION REQUIREMENTS ARE MET.

3. ***SHOVEL-SLICE PIPE BEDDING UNDER THE HAUNCHES OF THE PIPE.***

4. ***ALL TRAFFIC STRIPPING MUST BE REINSTALLED PER CALTRANS STANDARDS.***

CITY OF SANTA CRUZ PUBLIC WORKS DEPARTMENT ENGINEERING DIVISION	SEWER PIPE TRENCH DETAIL	DATE: MARCH 2011	
	CITY ENGINEER:	SCALE: NONE	
		DWG NO. 1 OF 20	

NTS

SEWER PIPE TRENCH

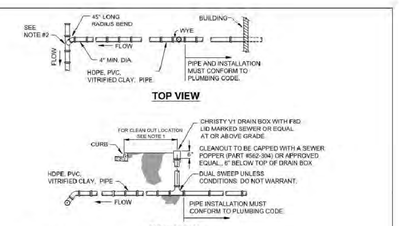

TOP VIEW

SIDE VIEW

NOTES:

1. LOCATE CLEANOUT BOX IN SIDEWALK OR DRIVEWAY. IF THERE IS NO SIDEWALK LOCATE CLEANOUT 16" TO 12" BEHIND FACE OF CURB. IF LOCATED IN A DRIVEWAY, BOX SHALL HAVE A TRAFFIC RATED LID.
2. LATERAL CONNECTIONS:
   A) **LATERAL CONNECTION TO 6" MAIN PIPELINE**: REPLACE A PORTION OF MAIN WITH A MANUFACTURED WYE.
   B) **LATERAL CONNECTION TO 8" AND 10" MAIN PIPELINE**: CORE DRILL AND USE A ROMAC "CS" SEWER SADDLE OR USE A NDS FLEXIBLE SADDLE WHEN RECONNECTING AT EXISTING LATERAL CONNECTION LOCATION.
   C) **LATERAL CONNECTION TO 12" AND LARGER MAIN PIPELINE**: WITH APPROVAL BY THE PUBLIC WORKS INSPECTOR, THE CONTRACTOR SHALL CORE DRILL AND USE INSERTA TEE INSTALLED BY CERTIFIED *INSERTA TEE*® INSTALLER.
3. ANY PIPE REPAIR COUPLING SHALL BE *FERNCO* SHEER BAND WITH 24 GAUGE STAINLESS STEEL BANDS AND SHEAR BAND OR APPROVED EQUAL.
4. PIPE SHALL BE:
   A) HDPE - SOLID WALL SDR 26. OR
   B) PVC SDR 26 GASKET SEWER PIPE ASTM 3034. OR
   C) VITRIFIED CLAY SEWER PIPE ASTM C 700, WITH COMPRESSION JOINT ASTM C 425
5. PROVIDE THREE FEET OF COVER UNLESS PROPER SLOPE TO SEWER MAIN DICTATES LESS COVER.
6. IF CONNECTION TO MAIN PIPELINE IS GREATER THAN 8 FEET DEEP USE A CHIMNEY CONNECTION FULLY SUPPORTED WITH A 2-SACK SLURRY.
7. SLOPE SHALL NOT BE LESS THAN ¼" PER FOOT.
8. A MINIMUM OF 2" OF BEDDING SHALL BE PROVIDED. FOLLOW CITY TYPICAL PIPE TRENCH DETAIL.
9. IF THE RIM OF ANY FIXTURE (IN THE BUILDING) IS BELOW THE ELEVATION OF THE NEXT UPSTREAM SEWER MANHOLE COVER, THEN A BAGWATER VALVE IS REQUIRED. VALVE SHALL BE LOCATED BETWEEN THE BUILDING AND CLEANOUT. USE *CLEAN CHECK* BACK FLOW PREVENTION DEVICE OR APPROVED EQUAL.
10. ALL PIPES REHABILITATED WITH THE LINING PROCESS SHALL BE TELEVISED TO SHOW THE FULL LENGTH OF LINING AND THE CONNECTION AT THE MAIN. INSPECTION SHALL BE PERFORMED WHILE THE PUBLIC WORKS INSPECTOR IS ON SITE, OR A TAPE OR DVD SHALL BE PROVIDED TO THE INSPECTOR FOR REVIEW.

CITY OF SANTA CRUZ PUBLIC WORKS DEPARTMENT ENGINEERING DIVISION	SEWER LATERAL	DATE: AUGUST 2009	
	CITY ENGINEER:	SCALE: NONE	
		DWG NO. 2 OF 20	

NTS

SEWER LATERAL

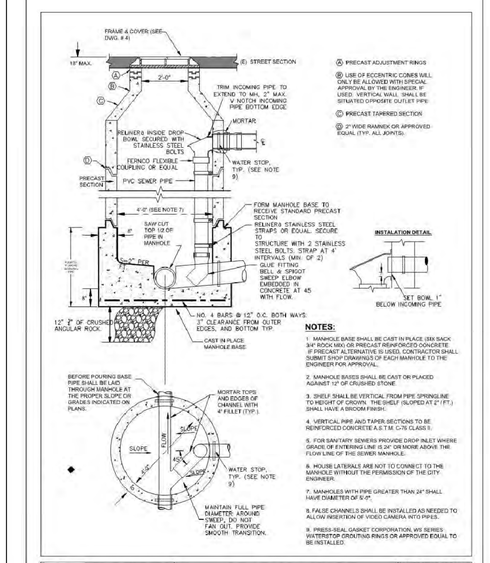

Ⓐ PRECAST ADJUSTMENT RINGS

Ⓑ USE OF ECCENTRIC CONES WALL ONLY BE ALLOWED WITH SPECIAL APPROVAL BY THE ENGINEER. IF USED: VERTICAL WALL SHALL BE SITUATED OPPOSITE OUTLET PIPE.

Ⓒ PRECAST TAPERED SECTION

Ⓓ 2" WIDE RAMNEK OR APPROVED EQUAL (TYP. ALL JOINTS).

NOTES:

1. MANHOLE BASE SHALL BE CAST IN PLACE (SIX SACK 3/4" ROCK MIX) OR PRECAST REINFORCED CONCRETE. IF PRECAST ALTERNATIVE IS USED, CONTRACTOR SHALL SUBMIT SHOP DRAWINGS OF EACH MANHOLE TO THE ENGINEER FOR APPROVAL.
2. MANHOLE BASES SHALL BE CAST OR PLACED AGAINST 12" OF CRUSHED STONE
3. SHELF SHALL BE VERTICAL FROM PIPE SPRINGLINE TO HEIGHT OF CROWN. THE SHELF (SLOPED AT 2" / FT.) SHALL HAVE A BROOM FINISH.
4. VERTICAL PIPE AND TAPER SECTIONS TO BE REINFORCED CONCRETE A.S.T.M. C-76 CLASS II.
5. FOR SANITARY SEWERS PROVIDE DROP INLET WHERE GRADE OF ENTERING LINE IS 24" OR MORE ABOVE THE FLOW LINE OF THE SEWER MANHOLE.
6. HOUSE LATERALS ARE NOT TO CONNECT TO THE MANHOLE WITHOUT THE PERMISSION OF THE CITY ENGINEER.
7. MANHOLES WITH PIPE GREATER THAN 24" SHALL HAVE DIAMETER OF 6'-0".
8. FALSE CHANNELS SHALL BE INSTALLED AS NEEDED TO ALLOW INSERTION OF VIDEO CAMERA INTO PIPES.
9. PRESS-SEAL GASKET CORPORATION, WR SERIES WATERSTOP CRUTCHES RINGS OR APPROVED EQUAL TO BE INSTALLED.

CITY OF SANTA CRUZ PUBLIC WORKS DEPARTMENT ENGINEERING DIVISION	STANDARD MANHOLE	DATE: FEBRUARY 2011	
	CITY ENGINEER:	SCALE: NONE	
		DWG NO. 3 OF 20	

NTS

STANDARD MANHOLE

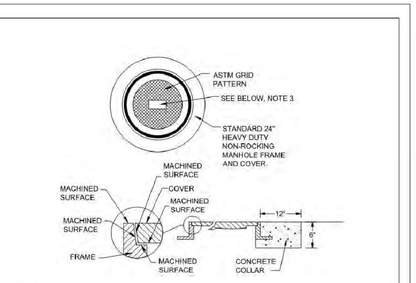

NOTES:

1. FRAME AND COVER SHALL BE BY THE SAME MANUFACTURER. FOUNDRY NAME SHALL BE STAMPED ON FRAME AND COVER. FRAME AND COVER TO BE PHEONIX IRON WORKS CAT No. P-1090, OR D & L SUPPLY No.A-1024, OR APPROVED SUBMITTED EQUAL.
2. FRAMES & COVERS SHALL BE FULLY MACHINED ON A TOTAL OF FIVE SURFACES TO ENSURE INTERCHANGABILITY AND A CLOSE, QUIET FIT. MACHINED VERTICAL SURFACES SHALL BE SLOPED.
3. COVER SHALL BE MARKED "SANITARY SEWER" OR "STORM DRAIN" AS APPROBIATE.
4. COVER SURFACE SHALL BE SKID RESISTANT PER ASTM SPECIAL PUBLICATION.
5. ALL CASTINGS SHALL BE DIPPED IN ASPHALT PAINT.
6. ALL MATERIAL USED IN MANUFACTURING SHALL CONFORM TO ASTM SPECIFICATION A159-64T-G3000 OR OR UNITED STATES GOVERNMENT SPECIFICATION QQ1-653, MANUFACTURED UNDER U.S. PATENT No. 3289556.
7. STORM DRAIN MANHOLES SHALL HAVE OPEN PICKHOLES. SANITARY SEWER MANHOLE COVERS SHALL HAVE CLOSED PICKHOLES. BOTTOM GASKETS MAY BE REQUIRED BY CITY ENGINEER ON SANITARY SEWER MANHOLE COVERS TO PREVENT INFILITRATION.
8. APPROXIMATE WEIGHT COMPONENTS: COVER - 140lbs.
   FRAME - 130 lbs.
   TOTAL - 270 lbs.

CITY OF SANTA CRUZ PUBLIC WORKS DEPARTMENT ENGINEERING DIVISION	MANHOLE FRAME AND COVER	DATE: APRIL 2003	
	CITY ENGINEER:	SCALE: NONE	
		DWG NO. 4 OF 20	

NTS

MANHOLE FRAME AND COVER

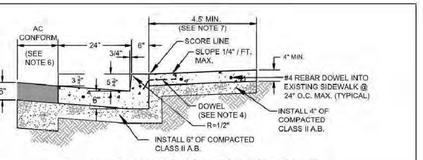

STANDARD CURB, GUTTER & SIDEWALK

NOTES:

1. ALL CONCRETE TO BE SIX SACK, CLASS "A" PLANT MIXED PCC.
2. COMPACT SUBBASE SOIL TO 95% RELATIVE COMPACTION AT OPTIMUM MOISTURE CONTENT TO A DEPTH OF 6".
3. STANDARD CURB, GUTTER AND SIDEWALK SHALL BE A MONOLITHIC POUR UNLESS CURB AND GUTTER ARE EXISTING.
4. IF ANY CURB, GUTTER OR SIDEWALK ARE EXISTING, DOWEL INTO EXISTING CONCRETE EVERY24". USE 18" LONG #4 DOWELS, INSERT 4" INTO CURB. BEND DOWEL AT BACK OF CURB AS SHOWN.
5. SCORE SIDEWALK EVERY 4 FT. PLACE EXPANSION JOINTS EVERY 60 FEET WITH DEEP JOINTS EVERY 12 FT.
6. WIDTH OF A.C. CONFORM SHALL BE A MINIMUM OF 2 FEET. A.C. CONFORM SHALL BE A MINIMUM OF 6" THICK ON TOP OF 6" OF CLASS II A.B.
7. CITY ENGINEER MAY REQUIRE MODIFICATIONS OF MINIMUM WIDTH TO CONFORM TO SURROUNDING NEIGHBORHOOD.

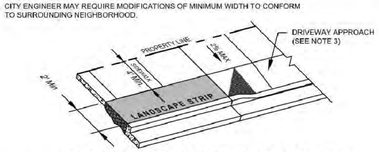

SIDEWALK LANDSCAPE STRIP INSTALLATION

NOTES:

1. PROPERTIES THAT HAVE A 6 FT. OR GREATER PROPERTY LINE SETBACK FROM THE STREET WILL BE REQUIRED TO INSTALL A LANDSCAPE STRIP BETWEEN THE BACK OF CURB AND SIDEWALK.
2. SLOPE SIDEWALK AND LANDSCAPING STRIP TOWARD CURB AT 1/4" / FT. (2%) MAX.
3. FOR DRIVEWAY APPROACH CONSTRUCTION SEE CITY DETAIL 9 OF 23 TYPE "A" DRIVEWAY WITH PLANTER.

CITY OF SANTA CRUZ PUBLIC WORKS DEPARTMENT ENGINEERING DIVISION	CURB, GUTTER AND SIDEWALK	DATE: MARCH 2011	
	CITY ENGINEER:	SCALE: NONE	
		DWG NO. 8 OF 20	

NTS

CURB, GUTTER & SIDEWALK

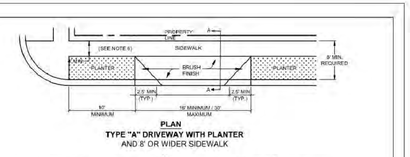

PLAN
TYPE "A" DRIVEWAY WITH PLANTER
AND 8' OR WIDER SIDEWALK

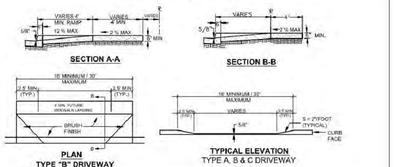

SECTION A-A **SECTION B-B**

PLAN
TYPE "B" DRIVEWAY
(WITH FUTURE SIDEWALK)

TYPICAL ELEVATION
TYPE A, B & C DRIVEWAY

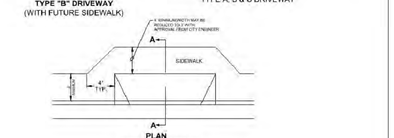

PLAN
TYPE "C" DRIVEWAY

NOTES:

1. SIDEWALK AREA ADJACENT TO DRIVEWAY APPROACH SHALL HAVE A 2% CROSS SLOPE.
2. ALL CONCRETE TO BE SIX SACK, CLASS "A" CONCRETE.
3. ALL CONCRETE SHALL BE REINFORCED WITH #4 BARS AT 18" O.C. BOTH WAYS OR WELDED WIRE MESH 4"X4" W4/W4.
4. MAINTAIN 2" OF COVER FOR REINFORCEMENT.
5. NATIVE SUBBASE SHALL BE COMPACTED. IF MATERIAL IS SILT OR CLAY IT SHALL BE "FIRM" ACCORDING TO ASTM. OTHERWISE EXCAVATE TO 12" BELOW FINISH GRADE AND REPLACE WITH CLASS II AGGREGATE BASE AND COMPACT.
6. WIDTH MAY BE REDUCED TO 3' WITH APPROVAL FROM THE CITY ENGINEER.

CITY OF SANTA CRUZ PUBLIC WORKS DEPARTMENT ENGINEERING DIVISION	DRIVEWAY APPROACH	DATE: APRIL 2003	
	CITY ENGINEER:	SCALE: NONE	
		DWG NO. 9 OF 20	

NTS

DRIVEWAY APPROACH DETAIL

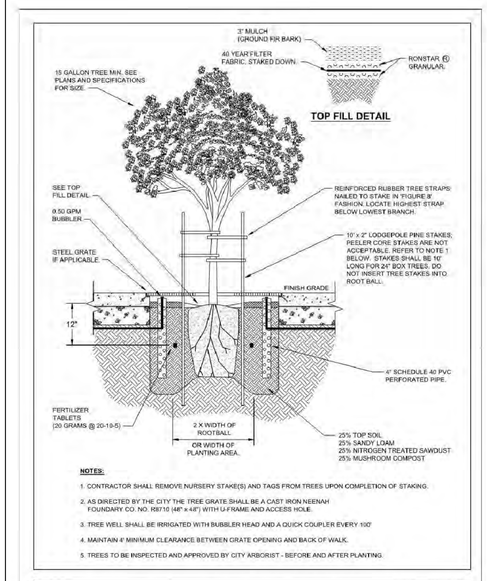

NOTES:

1. CONTRACTOR SHALL REMOVE NURSERY STAKE(S) AND TAGS FROM TREES UPON COMPLETION OF STAKING.
2. AS DIRECTED BY THE CITY THE TREE GRATE SHALL BE A CAST IRON NEENAH FOUNDARY CO. NO. R3710 (48" x 48") WITH U-FRAME AND ACCESS HOLE.
3. TREE WELL SHALL BE IRRIGATED WITH BUBBLER HEAD AND A QUICK COUPLER EVERY 100'
4. MAINTAIN 4' MINIMUM CLEARANCE BETWEEN GRATE OPENING AND BACK OF WALK.
5. TREES TO BE INSPECTED AND APPROVED BY CITY ARBORIST - BEFORE AND AFTER PLANTING.

CITY OF SANTA CRUZ PUBLIC WORKS DEPARTMENT ENGINEERING DIVISION	TREE PLANTING DETAIL	DATE: MARCH 2011	
	CITY ENGINEER:	SCALE: NONE	
		DWG NO. 15 OF 20	

NTS

TREE PLANTER

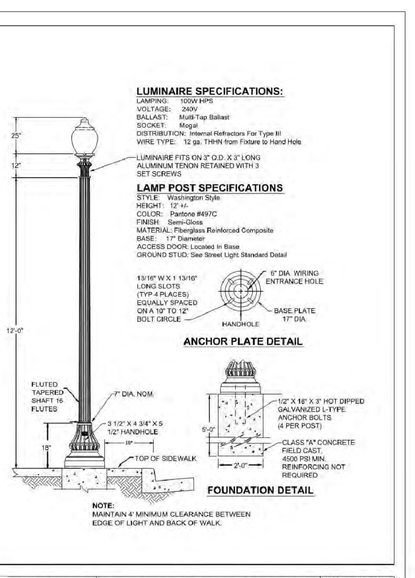

CITY OF SANTA CRUZ PUBLIC WORKS DEPARTMENT ENGINEERING DIVISION	DECORATIVE STREET LIGHTING	DATE: APRIL 2003	
	CITY ENGINEER:	SCALE: NONE	
		DWG NO. 17 OF 20	

NTS

DECORATIVE STREET LIGHTING

REGISTERED PROFESSIONAL ENGINEER MITCHELL W. BURLE No. 57874 Exp. 6-30-20 CIVIL STATE OF CALIFORNIA

BKF 100 YEARS
1730 NORTH FIRST ST., SUITE 600
SAN JOSE, CA 95112
(408) 467-9100
www.bkf.com
ENGINEERS . SURVEYORS . PLANNERS

RIVERFRONT PROJECT
412, 418, 428, 440, 504, AND 508 FRONT STREET
CITY DETAILS
SANTA CRUZ COUNTY, CALIFORNIA

SANTA CRUZ

Revisions

No.	

Date 05/20/19
Scale AS SHOWN
Design MWB
Drawn .
Approved .
Job No 20176131

Drawing Number:
C9.2
13 OF 13

DRAWING NAME: K:\2017\176131_Riverfront_Apt_Santa_Cruz\ENG\BASE_FILES\RFCIVILPLANS01.dwg
PLOT DATE: 05-20-19 PLOTTED BY: BUR

© BKF Engineers

TENTATIVE MAP
RIVERFRONT PROJECT
412-508 FRONT STREET
SANTA CRUZ, CA 95060

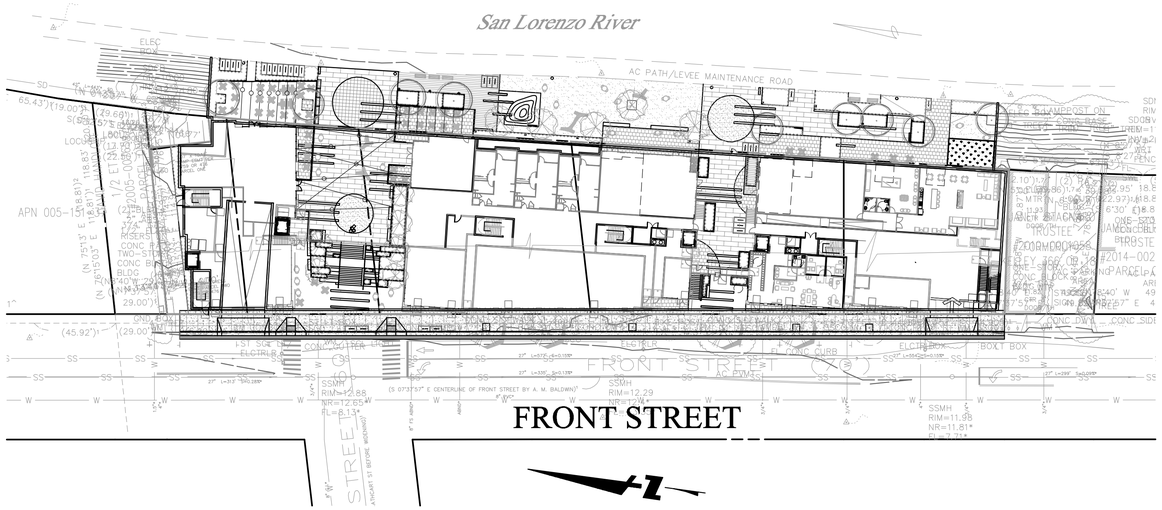

FRONT STREET

SITE MAP
1"=40'

ABBREVIATIONS

AB	AGGREGATE BASE	LG	LIP OF GUTTER
AC	ASPHALT CONCRETE	LP	LOW POINT
ACC	ACCESSIBLE	MH	MANHOLE
ACP	ASBESTOS CEMENT PIPE	N	NORTH
AD	AREA DRAIN	(N)	NEW
ALT	ALTERNATIVE	NTS	NOT TO SCALE
BC	BACK OF CURB	OH	OVERHEAD (WIRES)
BFP	BACKFLOW PREVENTER	PB	PULL BOX
BLDG	BUILDING	PP	POWER POLE
BOT	BOTTOM	(P)	PROPOSED
BW	BOTTOM OF WALL/BACK OF WALK	P/L	PROPERTY LINE
CB	CATCH BASIN	PCC	PORTLAND CEMENT CONCRETE
CI	CURB INLET	P/SBC	POWER/SBC TRENCH
CLR	CLEAR (OD TO OD)	P.F.S.E.	PRIVATE FIRE SERVICE EASEMENT
C&G	CURB AND GUTTER	P.I.E.E.	PRIVATE INGRESS, EGRESS EASEMENT
℄,CL	CENTERLINE	P.S.D.E.	PRIVATE STORM DRAIN EASEMENT
CLF	CHAIN LINK FENCE	P.S.S.E.	PRIVATE SANITARY SEWER EASEMENT
CO	CLEANOUT	P.U.E.	PUBLIC UTILITY EASEMENT
CONC	CONCRETE	PVC	POLYVINYL CHLORIDE PIPE
CONST	CONSTRUCTION	R	RIGHT/RADIUS
CR	CURB RETURN	RCP	REINFORCED CONCRETE PIPE
CW	CROSSWALK	RPA	REDUCED PRESSURE ASSEMBLY
DET/DTL	DETAIL	R/W	RIGHT-OF-WAY
DI	DROP INLET	RWD	REDWOOD
DIP	DUCTILE IRON PIPE	S	SLOPE/SOUTH
D/W	DRIVEWAY	SD	STORM DRAIN
DWG	DRAWING	SDMH	STORM DRAIN MANHOLE
E	EAST/ELECTRIC	SF	SQUARE FEET
(E),EX	EXISTING	SG	SUBGRADE
ELEC	ELECTRIC	SHT	SHEET
ELEV	ELEVATION	S/L	STREET LIGHT
EP	EDGE OF PAVEMENT	SLB	STREET LIGHT BOX
E.V.A.E.	EMERGENCY VEHICLE ACCESS EASEMENT	SLD	SEE LANDSCAPE DRAWINGS
FC	FACE OF CURB	SL	STREET LIGHT CONDUIT
FDC	FIRE DEPT CONNECTION	SS	SANITARY SEWER
FF	FINISH FLOOR	SSCO	SANITARY SEWER CLEANOUT
FG	FINISHED GRADE	SSMH	SANITARY SEWER MANHOLE
FH	FIRE HYDRANT	ST	STREET
FL	FLOWLINE	STD	STANDARD
FT	FEET	S/W	SIDEWALK
FW	FIRE WATER	T, TEL	TELEPHONE
G	GAS	TC	TOP OF CURB
GB	GRADE BREAK	TH	TOP OF HEADER
GR	GRATE	TRC	TOP OF ROLLED CURB
GRD	GROUND	TS	TOP OF STEP
GS	GARAGE SLAB	TSW	TOP OF SCREEN WALL
GYW	GUY WIRE	TW	TOP OF WALL
HP	HIGH POINT	TYP	TYPICAL
I.E.E.	INGRESS, EGRESS EASEMENT	UG	UNDERGROUND
INV	INVERT (ELEVATION)	VCP	VITRIFIED CLAY PIPE
IRR	IRRIGATION	W	WATER/WEST
JP	JOINT UTILITY POLE	WM	WATER METER
JT	JOINT UTILITY TRENCH	WV	WATER VALVE
LAT	LATERAL	XWALK	CROSSWALK
LF	LINEAL FEET		

SHEET INDEX

TM 1.1	TITLE SHEET	TM 5.2	SITE SECTIONS
TM 2.1	EXISTING CONDITION PLAN	TM 6.1	UTILITY PLAN
TM 3.1	LOT LAYOUT PLAN	TM 7.1	STORMWATER CONTROL PLAN
TM 4.1	SITE PLAN	TM 7.2	CIVIL DETAILS
TM 5.1	GRADING PLAN		

GENERAL NOTES

1. TENTATIVE MAP: THIS TENTATIVE MAP IS BEING FILED IN ACCORDANCE WITH CHAPTER 3, ARTICLE 2, SECTION 66452 OF THE SUBDIVISION MAP ACT.
2. TENTATIVE MAP: THIS TENTATIVE MAP CONFORMS TO THE REQUIREMENTS OF CHAPTER 23.16.020 "TENTATIVE SUBDIVISION MAPS" OF THE CITY OF SANTA CRUZ MUNICIPAL CODE.
3. CONDOMINIUM: LOT 1 ON SHEET 3.1 IS SUBDIVIDED FOR CONDOMINIUM PURPOSES WITH A MAXIMUM OF 175 RESIDENTIAL CONDOMINIUM UNITS AND 8 COMMERCIAL CONDOMINIUM UNITS.
4. TOPOGRAPHY: TOPOGRAPHIC MAPPING WAS PERFORMED BY BOWMAN & WILLIAMS, 1011 CEDAR STREET, SANTA CRUZ, CA 95060. SURVEY DATE: 4/04/2016.
5. BENCHMARK: BM F4-1A ELEVATION 11.526 NGVD29. EASTSIDE FRONT STREET OPPOSITE METRO CENTER.
6. BOUNDARY: BOUNDARY AND EASEMENTS SHOWN PER BOWMAN & WILLIAMS, 1011 CEDAR STREET, SANTA CRUZ, CA 95060. SURVEY DATE: 4/04/2016.
7. UTILITIES: UTILITY SIZING AND LOCATIONS ARE PRELIMINARY AND SUBJECT TO FINAL ENGINEERING DESIGN.
8. LOTS: THE PROJECT WILL MERGE FIVE (5) EXISTING LOTS AND CREATE ONE (1) LOT FOR CONDOMINIUM PURPOSES.
9. EASEMENTS: EASEMENTS HAVE BEEN PROPOSED FOR PUBLIC ACCESS AND EMERGENCY VEHICLE ACCESS OVER PRIVATE LOT 1.

SUBDIVIDER'S STATEMENT

OWNER/SUBDIVIDER:	OWEN LAWLOR LAWLOR LAND USE 612 SPRING STREET SANTA CRUZ, CA 95060 TEL: (831) 457-1331
ENGINEER:	BKF ENGINEERS 1730 NORTH FIRST STREET SUITE 600 SAN JOSE, CA 95112 TEL: (408) 467-9100 ATTN: MITCH BURLEY
AREA:	ACREAGE – 1.04 AC
ASSESSORS PARCEL NO:	005-151-22, 30, 31, 39 AND 50
ZONE DISTRICT:	CBD: CENTRAL BUSINESS DISTRICT
SETBACKS:	SANTA CRUZ ZONING ORDINANCE/DEVELOPMENT AGREEMENT
EXISTING USE:	COMMERCIAL
PROPOSED USE:	175 RESIDENTIAL CONDOMINIUM UNITS (MAXIMUM) AND 8 COMMERCIAL USES (LOT 1)
PROPOSED IMPROVEMENTS:	DEMOLISH EXISTING BUILDINGS AND SITE IMPROVEMENTS AND MERGE FIVE (5) EXISTING PARCELS FOR THE CONSTRUCTION OF 175 RESIDENTIAL UNITS, 8 COMMERCIAL UNITS AND CONSTRUCT STREET INFRASTRUCTURE AND PROVIDE UTILITY SERVICES. INCLUDING STORM, SANITARY, WATER, GAS, ELECTRIC AND TELEPHONE.

SURVEYOR'S STATEMENT

THIS TENTATIVE MAP HAS BEEN PREPARED BY ME OR UNDER MY DIRECTION IN ACCORDANCE WITH THE STATE OF CALIFORNIA SUBDIVISION MAP ACT.

DAVIS THRESH, L.S.
ASSOCIATE/PROJECT MANAGER
BKF ENGINEERS

DATE

REGISTERED LAND SURVEYOR
DAVIS THRESH
EXP. 9/30/20
No. 6868
STATE OF CALIFORNIA

ENGINEER'S STATEMENT

THIS TENTATIVE MAP HAS BEEN PREPARED BY ME OR UNDER MY DIRECTION IN ACCORDANCE WITH STANDARD ENGINEERING PRACTICE.

MITCHEL W. BURLEY, P.E.
PROJECT MANAGER
BKF ENGINEERS

DATE

REGISTERED PROFESSIONAL ENGINEER
MITCHEL W. BURLEY
No. 57874
Exp. 6-30-20
CIVIL
STATE OF CALIFORNIA

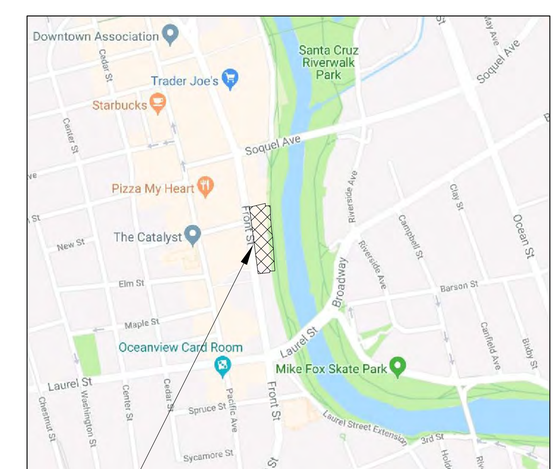

PROJECT LOCATION

VICINITY MAP
N.T.S.

BKF 100 YEARS
ENGINEERS . SURVEYORS . PLANNERS
1730 NORTH FIRST ST., SUITE 600
SAN JOSE, CA 95112
(408) 467-9100
www.bkf.com

TENTATIVE MAP / RIVERFRONT PROJECT
412, 418, 428, 440, 504, AND 508 FRONT STREET
TITLE SHEET
SANTA CRUZ COUNTY CALIFORNIA

SANTA CRUZ

Revisions	No.

Date 06/13/19
Scale AS SHOWN
Design MWB
Drawn .
Approved .
Job No 20176131

Drawing Number:
C1.1
1 OF 9

DRAWING NAME: K:\2017\176131_Riverfront_Apt_Santa_Cruz\ENG\BASE_FILES\RFTENTMAP.dwg
PLOT DATE: 06-14-19 PLOTTED BY: BUR

© BKF Engineers

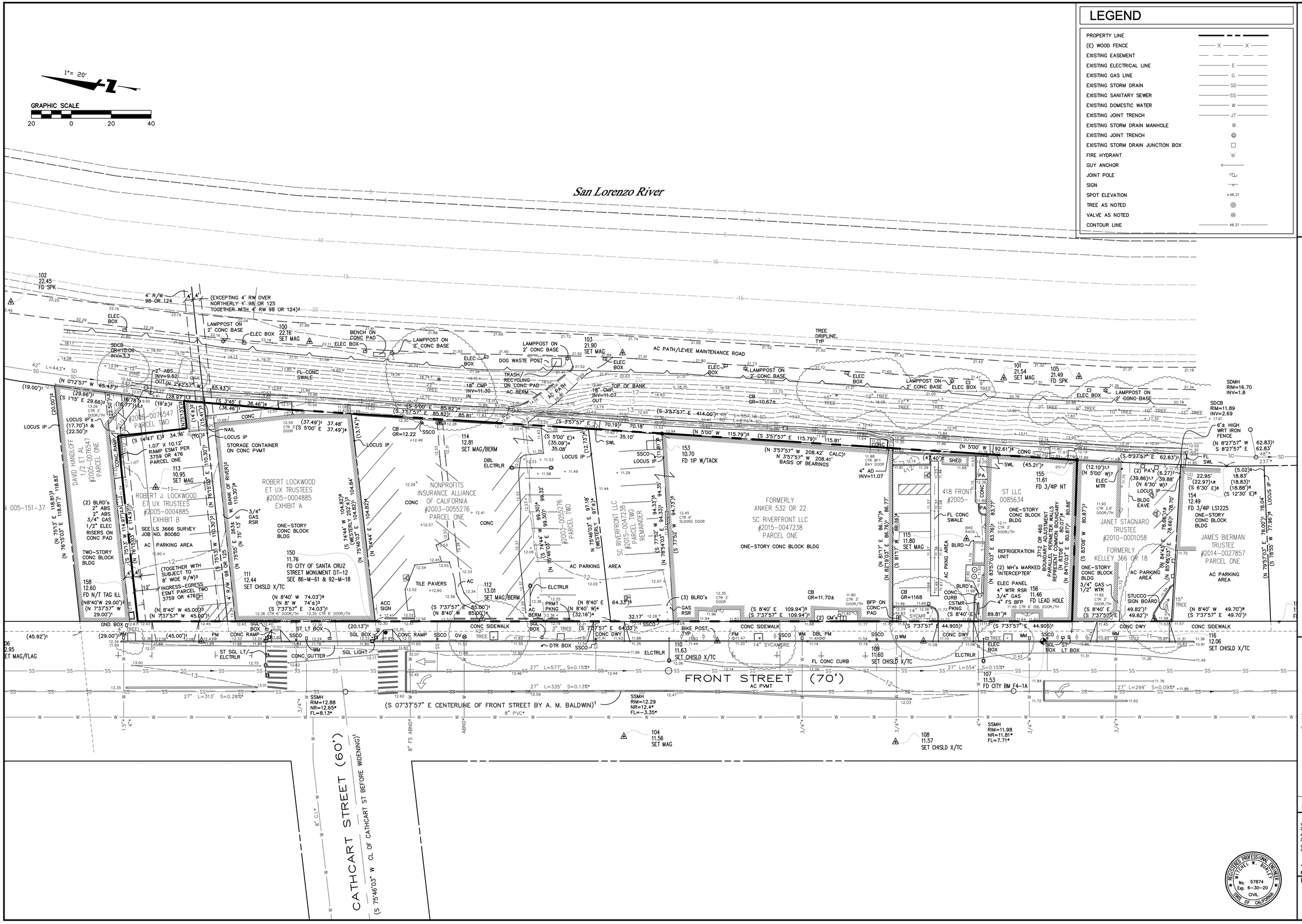

LEGEND

PROPERTY LINE	
(E) WOOD FENCE	X X
EXISTING EASEMENT	
EXISTING ELECTRICAL LINE	E
EXISTING GAS LINE	G
EXISTING STORM DRAIN	SD
EXISTING SANITARY SEWER	SS
EXISTING DOMESTIC WATER	W
EXISTING JOINT TRENCH	JT
EXISTING STORM DRAIN MANHOLE	
EXISTING JOINT TRENCH	
EXISTING STORM DRAIN JUNCTION BOX	
FIRE HYDRANT	
GUY ANCHOR	
JOINT POLE	
SIGN	
SPOT ELEVATION	+46.21
TREE AS NOTED	
VALVE AS NOTED	
CONTOUR LINE	46.21

BKF 100+ YEARS
1730 NORTH FIRST ST., SUITE 600
SAN JOSE, CA 95112
(408) 467-9100
www.bkf.com
ENGINEERS . SURVEYORS . PLANNERS

TENTATIVE MAP / RIVERFRONT PROJECT
412, 418, 428, 440, 504, AND 508 FRONT STREET
EXISTING CONDITION PLAN

SANTA CRUZ COUNTY, CALIFORNIA

SANTA CRUZ

Revisions

No.	

Date	06/13/19
Scale	1" = 20'
Design	MWB
Drawn	
Approved	
Job No	20176131

REGISTERED PROFESSIONAL ENGINEER MITCHEL W. BURLEY No. 57874 Exp. 6-30-20 CIVIL STATE OF CALIFORNIA

Drawing Number:
C2.1
2 OF 9

DRAWING NAME: K:\2017\176131_Riverfront_Apt_Santa_Cruz\ENG\BASE_FILES\RFTENTMAP.dwg
PLOT DATE: 06-13-19 PLOTTED BY: BUR

© BKF Engineers

1"= 20'

GRAPHIC SCALE

20 0 20 40

San Lorenzo River

LOT 1
FOR CONDOMINIUM PURPOSES
(175 RESIDENTIAL UNITS, 8 COMMERCIAL UNITS)

PROPOSED PUBLIC ACCESS EASEMENT

PROPOSED PUBLIC ACCESS EASEMENT

S 3°57'57" E 401.90'

S 7°37'57" E 468.11'

FRONT STREET (70')

(S 07°37'57" E CENTERLINE OF FRONT STREET BY A. M. BALDWIN)[1]

CATHCART STREET (60')

(S 75°46'03" W CL OF CATHCART ST BEFORE WIDENING)[1]

ROBERT LOCKWOOD ET UX TRUSTEES #2005-0004885 EXHIBIT A

ROBERT J. LOCKWOOD ET UX TRUSTEES #2005-0004885 EXHIBIT B

SEE LS 3666 SURVEY JOB NO. 80080

DAVID HANDLOFF 1/2 ET AL #2005-0076547 PARCEL ONE

#2005-0076547 PARCEL TWO

NONPROFITS INSURANCE ALLIANCE OF CALIFORNIA #2003-0055276 PARCEL ONE

#2003-0055276 PARCEL TWO

SC RIVERFRONT LLC #2015-0047238 PARCEL TWO REMAINDER

FORMERLY ANKER 532 OR 22 SC RIVERFRONT LLC #2015-0047238 PARCEL ONE

418 FRONT #2005-

ST LLC 0085634

JANET STAGNARO TRUSTEE #2010-0001058 FORMERLY KELLEY 366 OR 18

JAMES BIERMAN TRUSTEE #2014-0027857 PARCEL ONE

N 005-151-37

REGISTERED PROFESSIONAL ENGINEER MITCHEL W. BUSLEY No. 57874 Exp. 6-30-20 CIVIL STATE OF CALIFORNIA

DRAWING NAME: K:\2017\176131_Riverfront_Apt_Santa_Cruz\ENG\BASE_FILES\RFTENTMAP3.1.dwg
PLOT DATE: 06-14-19 PLOTTED BY: BUR

BKF 100 YEARS
1730 NORTH FIRST ST., SUITE 600
SAN JOSE, CA 95112
(408) 467-9100
www.bkf.com
ENGINEERS . SURVEYORS . PLANNERS

TENTATIVE MAP / RIVERFRONT PROJECT
412, 418, 428, 440, 504, AND 508 FRONT STREET
LOT LAYOUT PLAN

SANTA CRUZ COUNTY CALIFORNIA

SANTA CRUZ

Revisions	No.

Date 06/13/19
Scale 1" = 20'
Design MWB
Drawn .
Approved .
Job No 20176131

Drawing Number:
C3.1

3 OF 9

© BKF Engineers

GENERAL NOTES

1. CONTRACTOR SHALL REMOVE AND REPAIR ALL DAMAGED CURB, GUTTER, AND SIDEWALK ALONG THE PROPERTY FRONTAGE AND REPLACE IN KIND PER CITY STANDARDS.

CONSTRUCTION KEY NOTES

1. CONSTRUCT DRIVEWAY APPROACH PER CITY OF SANTA CRUZ STANDARDS.
2. INSTALL DETECTABLE WARNING.
3. CONSTRUCT VERTICAL CURB & GUTTER AND SIDEWALK PER CITY OF SANTA CRUZ STANDARDS.
4. CONCRETE AC PAVEMENT CONFORM
5. EDGE STRIPING AT THE 8-FOOT WIDTH MARK OF 12 FOOT WIDE, PAVED LEVEE PATH

LEGEND

- PROPERTY LINE
- VERTICAL CURB AND GUTTER
- RETAINING WALL (SEE STRUCTURAL PLANS)
- AC PAVEMENT
- CONCRETE PAVEMENT

1"= 20'

GRAPHIC SCALE

20 0 20 40

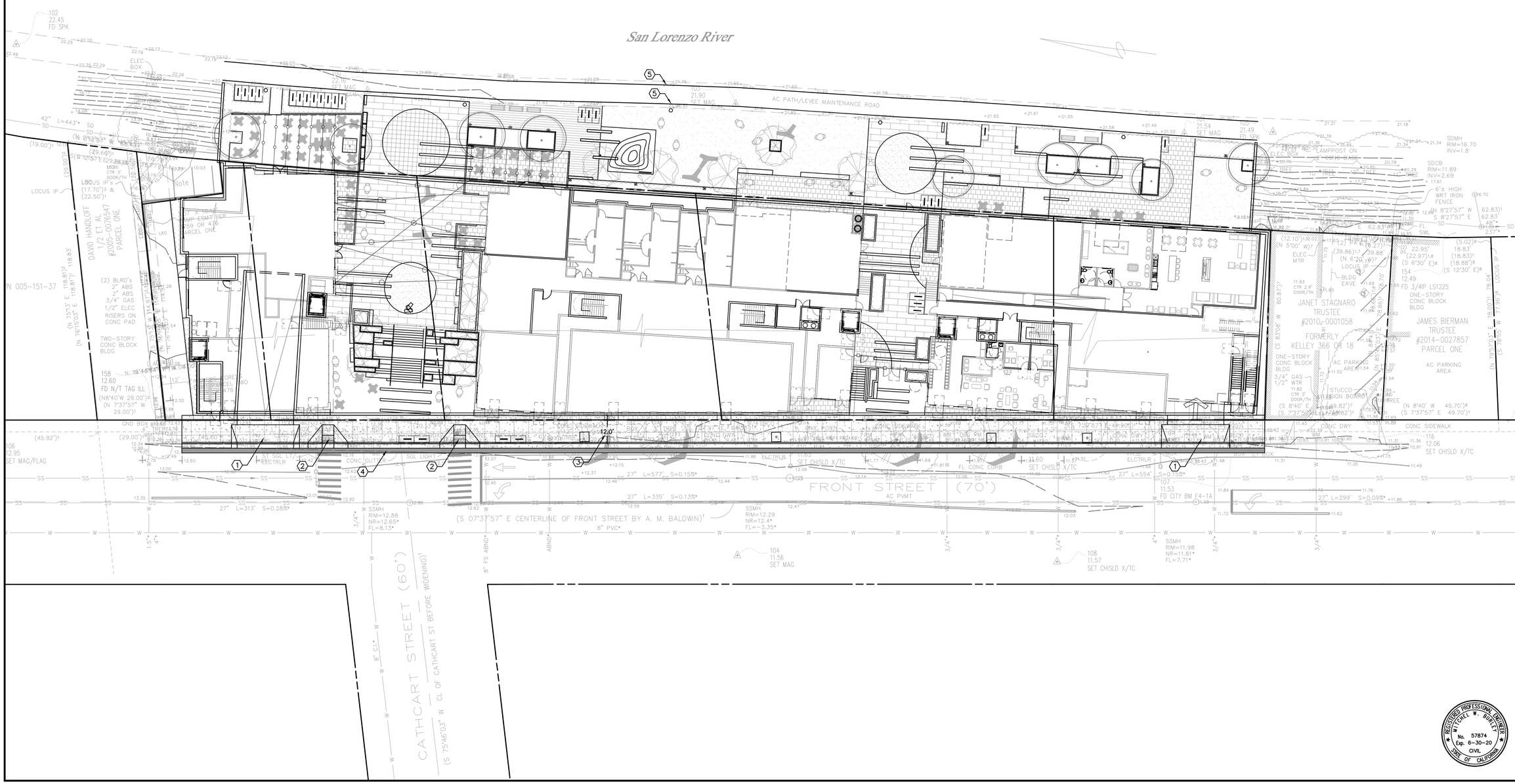

BKF 100+ YEARS
1730 NORTH FIRST ST., SUITE 600
SAN JOSE, CA 95112
(408) 467-9100
www.bkf.com
ENGINEERS . SURVEYORS . PLANNERS

TENTATIVE MAP / RIVERFRONT PROJECT
412, 418, 428, 440, 504, AND 508 FRONT STREET
SITE PLAN

SANTA CRUZ COUNTY, CALIFORNIA

Revisions | No.

Date 06/13/19
Scale 1" = 20'
Design MWB
Drawn .
Approved .
Job No 20176131

Drawing Number:
C4.1
4 OF 9

REGISTERED PROFESSIONAL ENGINEER MITCHEL W. BURLEY No. 57874 Exp. 6-30-20 CIVIL STATE OF CALIFORNIA

DRAWING NAME: K:\2017\176131_Riverfront_Apt_Santa_Cruz\ENG\BASE_FILES\RFTENTMAP.dwg
PLOT DATE: 06-13-19 PLOTTED BY: BUR

© BKF Engineers

1" = 20'

GRAPHIC SCALE

20 0 20 40

GENERAL NOTES

1. FINISHED GRADE AT LANDSCAPED AREAS ADJACENT TO THE BUILDING SHALL BE MINIMUM 8" BELOW FINISH FLOOR.
2. LANDSCAPED FINISHED GRADES AROUND THE PERIMETER OF BUILDING SHOULD BE COMPACTED AND SLOPED AT A 3% MIN. GRADIENT AWAY FROM FOUNDATION.
3. ALL PAVED AREAS ARE TO SLOPE A MINIMUM OF 0.5% AND MAXIMUM OF 8% ACCESSIBLE STALLS AND LOADING ZONES ARE TO SLOPE AT A MAXIMUM OF 2% IN ALL DIRECTIONS. ACCESSIBLE PATHWAYS ARE TO SLOPE AT A MAXIMUM OF 4.9% IN THE DIRECTION OF TRAVEL AND THE SLOPE CROSSWAYS TO THE DIRECTION OF TRAVEL SHALL BE AT A MAXIMUM OF 2%.
4. CONTRACTOR SHALL REMOVE AND REPAIR ALL DAMAGED CURB, GUTTER, AND SIDEWALK ALONG THE PROPERTY FRONTAGE PER CITY DIRECTION AND REPLACE IN KIND PER CITY STANDARDS.

LEGEND

DIRECTION OF FLOW (HARDSCAPE)	
DIRECTION OF FLOW (LANDSCAPE)	
STORM DRAIN JUNCTION BOX	SDJB
STORM DRAIN CLEAN OUT	SDCO
STORM DRAIN AREA DRAIN	AD
STORM DRAIN CATCH BASIN/OVERFLOW DRAIN	CB/OFD
STORM DRAIN INLET	DI
TRENCH DRAIN	
SANITARY SEWER MANHOLE	SSMH
SANITARY SEWER CLEANOUT	SSCO
OVERLAND STORM DRAIN RELEASE	
FF STEP	

LEGEND

PROPERTY LINE	
VERTICAL CURB & GUTTER	
RETAINING WALL	
DIRECTION OF FLOW	
FINISH FLOOR ELEVATION	FF 36.05
TOP OF CURB ELEVATION	TC 36.05
FINISHED GRADE ELEVATION	FG 36.05
FLOW LINE ELEVATION ELEVATION	FL 36.05
TOP OF WALL	TW 36.05
BOTTOM OF WALL/BACK OF WALK	BW 36.05
HIGH POINT	HP
LOW POINT	LP
PAVEMENT ELEVATION	PV 36.05

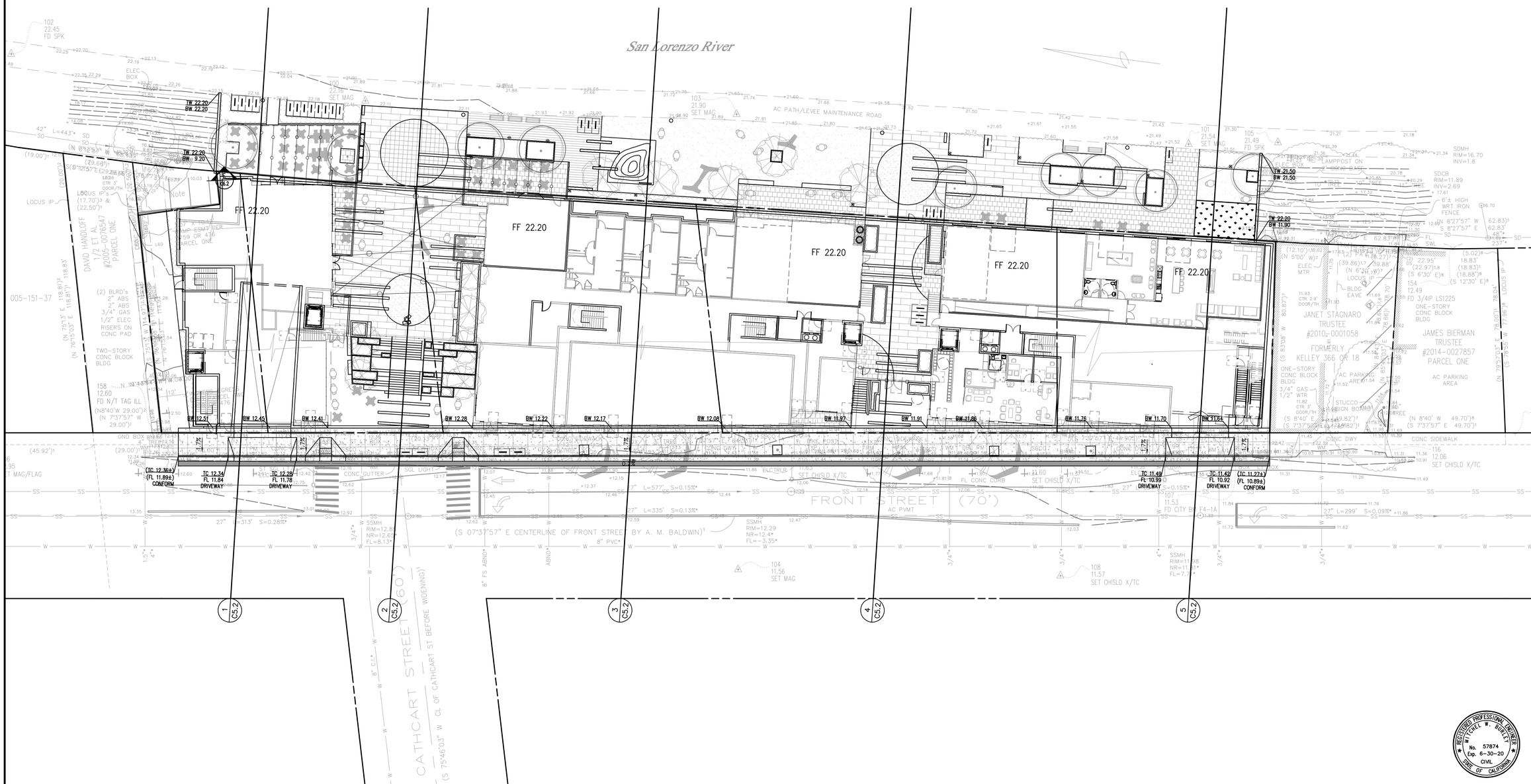

BKF 100+ YEARS
1730 NORTH FIRST ST., SUITE 600
SAN JOSE, CA 95112
(408) 467-9100
www.bkf.com
ENGINEERS . SURVEYORS . PLANNERS

TENTATIVE MAP / RIVERFRONT PROJECT
412, 418, 428, 440, 504, AND 508 FRONT STREET
GRADING PLAN

SANTA CRUZ COUNTY CALIFORNIA

Revisions

No.	

Date 06/13/19
Scale 1" = 20'
Design MWB
Drawn .
Approved .
Job No 20176131

REGISTERED PROFESSIONAL ENGINEER MITCHEL W. BIGELEY No. 57874 Exp. 6-30-20 CIVIL STATE OF CALIFORNIA

Drawing Number:
C5.1
5 OF 9

DRAWING NAME: K:\2017\176131_Riverfront_Apt_Santa_Cruz\ENG\BASE_FILES\RFTENTMAP.dwg
PLOT DATE: 06-13-19 PLOTTED BY: BUR

© BKF Engineers

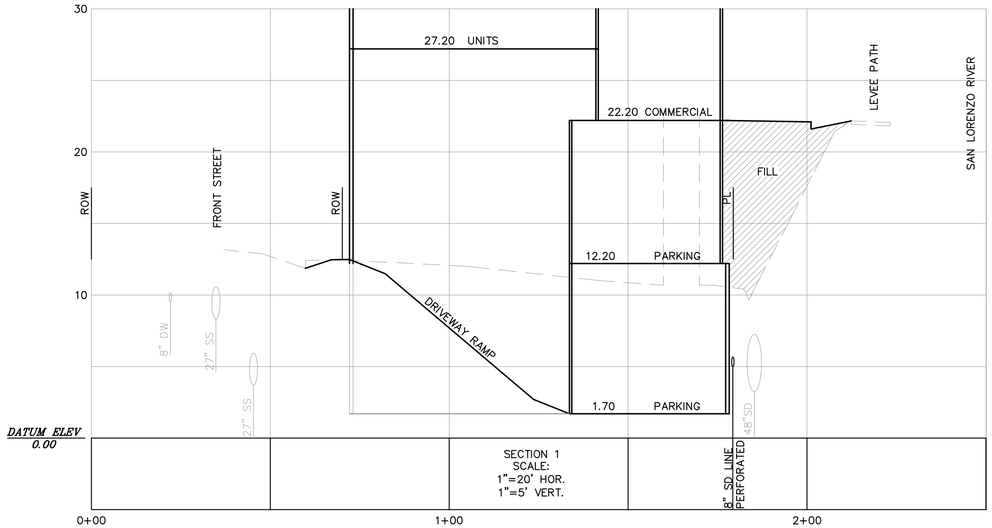

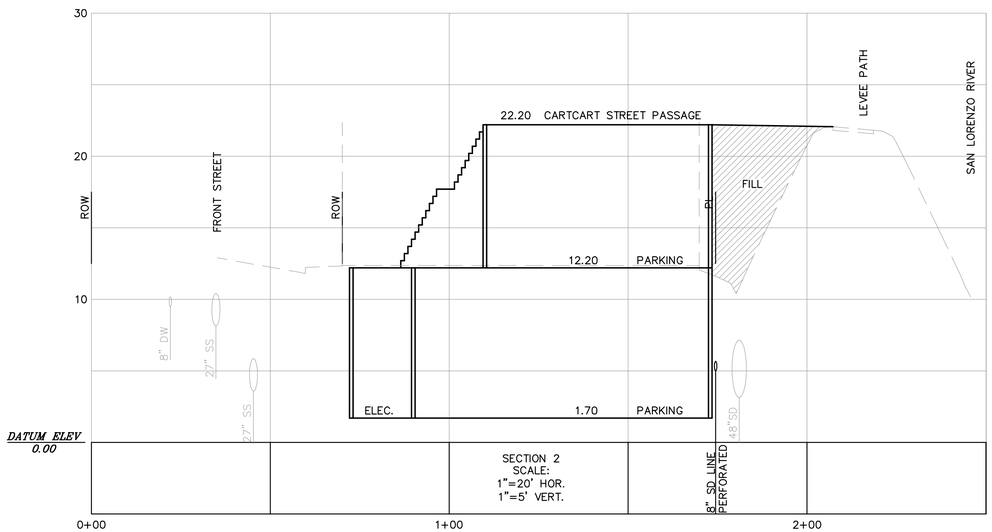

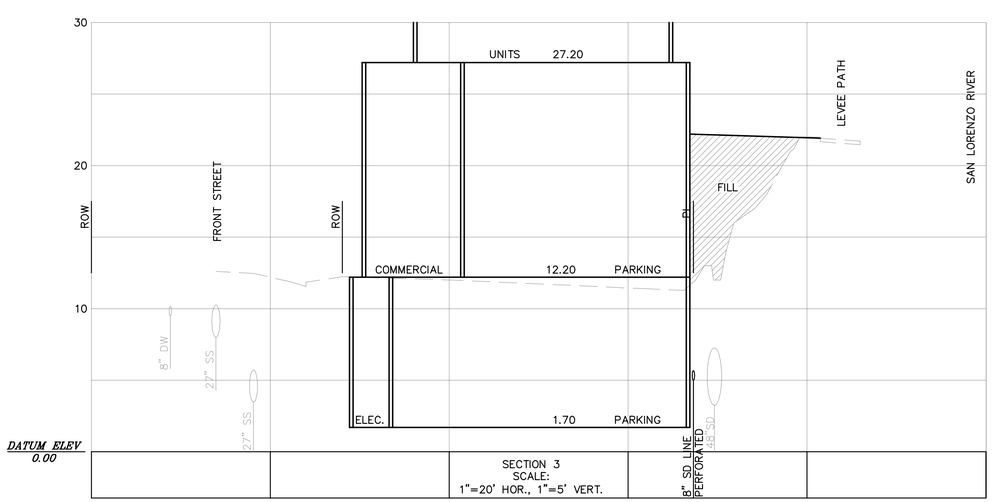

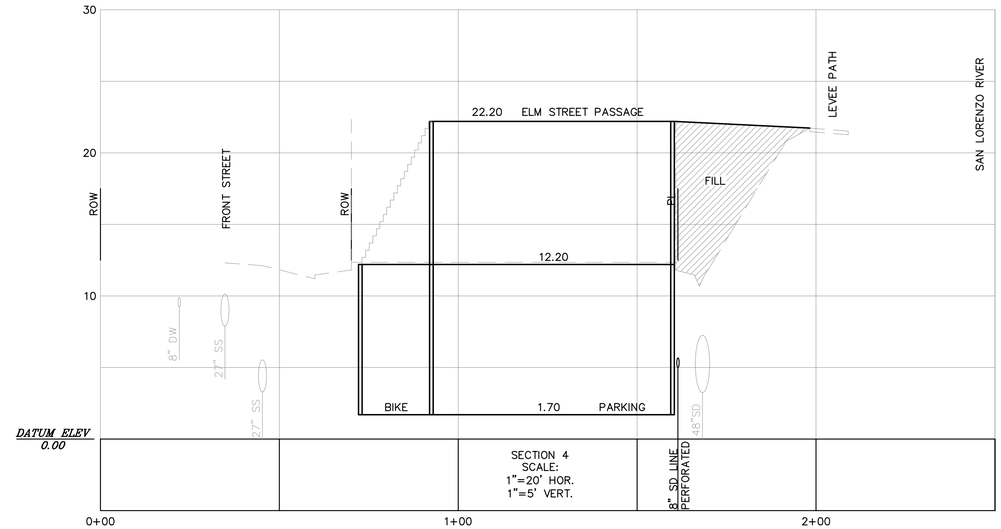

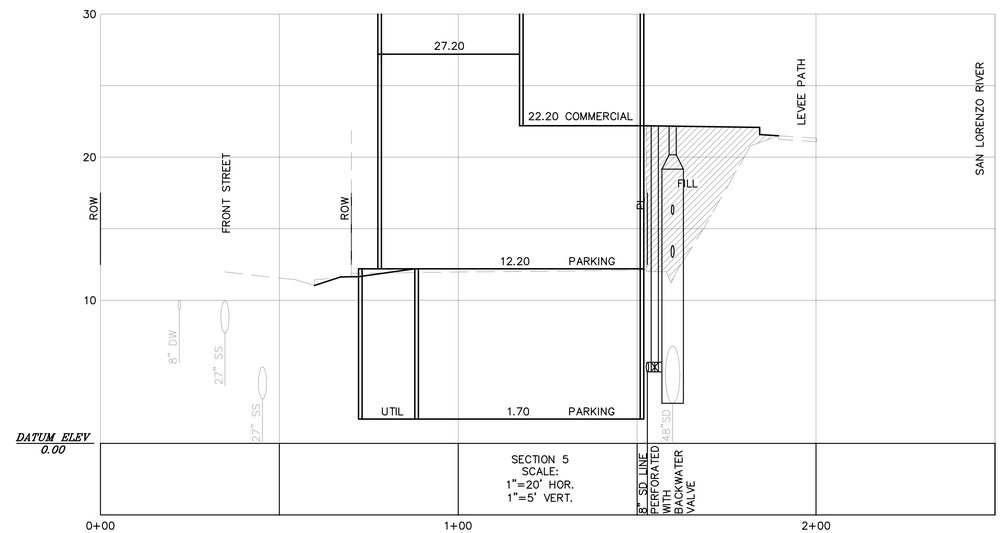

BKF 100+ YEARS
1730 NORTH FIRST ST., SUITE 600
SAN JOSE, CA 95112
(408) 467-9100
www.bkf.com
ENGINEERS . SURVEYORS . PLANNERS

TENTATIVE MAP / RIVERFRONT PROJECT
412, 418, 428, 440, 504, AND 508 FRONT STREET
SITE SECTIONS

SANTA CRUZ COUNTY, CALIFORNIA

SANTA CRUZ

Revisions

No.	

Date 06/13/19
Scale AS SHOWN
Design MWB
Drawn .
Approved .
Job No 20176131

REGISTERED PROFESSIONAL ENGINEER
MITCHEL W. BUSLEY
No. 57874
Exp. 6-30-20
CIVIL
STATE OF CALIFORNIA

Drawing Number:
C5.2
6 OF 9

DRAWING NAME: K:\2017\176131_Riverfront_Apt_Santa_Cruz\ENG\BASE_FILES\RFTENTMAP.dwg
PLOT DATE: 06-13-19 PLOTTED BY: BUR

© BKF Engineers

GENERAL NOTES

1. ALL SEWER PIPES SHALL BE INSTALLED PER SANTA CRUZ STANDARD DETAILS.

CONSTRUCTION KEY NOTES

6. NEW 8" FIRE SERVICE (TO SERVE FIRE SPRINKLERS ONLY) INSTALLATION WITH A SCWD APPROVED DOUBLE-CHECK DETECTOR ASSEMBLY BACKFLOW DEVICE INSTALLATION AS PER SCWD DETAIL 9.
7. NEW 4" DOMESTIC WATER SERVICE INSTALLATION WITH A SCWD APPROVED REDUCED PRESSURE BACKFLOW DEVICE AND WATER METER AS PER SCWD DETAIL 6.
8. INSTALL CHRISTY G05 VALVE BOX AND G05C LID PER SANTA CRUZ WATER SYSTEM STANDARD SPECIFICATIONS.

CONSTRUCTION KEY NOTES

1. INSTALL 12"x12" STORM DRAIN JUNCTION BOX PER DETAIL 7, SHEET C7.2.
2. INSTALL STORM DRAIN TREATMENT MANHOLE PER DETAIL 7, SHEET C7.2.
3. INSTALL SANITARY SEWER CLEANOUT & LATERAL PER SANTA CRUZ STANDARD DETAILS. SEE PLUMBING PLANS FOR CONTINUATION INTO THE BUILDING.
4. INSTALL AREA DRAIN.
5. INSTALL SANITARY SEWER MANHOLE PER SANTA CRUZ STANDARD DETAILS.

LEGEND

FIRE HYDRANT/FIRE DEPT. CONNECTION	FH/FDC
REDUCED PRESSURE BACKFLOW DEVICE	
DOUBLE-CHECK DETECTOR ASSEMBLY	
WATER VALVE	WV
CHECK VALVE	CV
WATER METER	WM

LEGEND

PROPERTY LINE	
CURB AND GUTTER	
SANITARY LINE	10" SDR 26 PVC SS
OVERFLOW STORM DRAIN LINE (TREATED)	12" HDPE
STORM DRAIN LINE (UNTREATED)	6"/8" HDPE SD
TRENCH DRAIN	
WATER LINE	8" W
GAS LINE	G
JOINT TRENCH	JT
AREA DRAIN	AD
SANITARY SEWER MANHOLE	SSMH
SANITARY SEWER CLEANOUT	SSCO
STORM DRAIN MANHOLE	SDMH
STORM DRAIN CLEAN OUT	SDCO
STORM DRAIN CATCH BASIN/DRAIN INLET	CB/DI
STORM DRAIN JUNCTION BOX	SDJB

1"= 20'

GRAPHIC SCALE

20 0 20 40

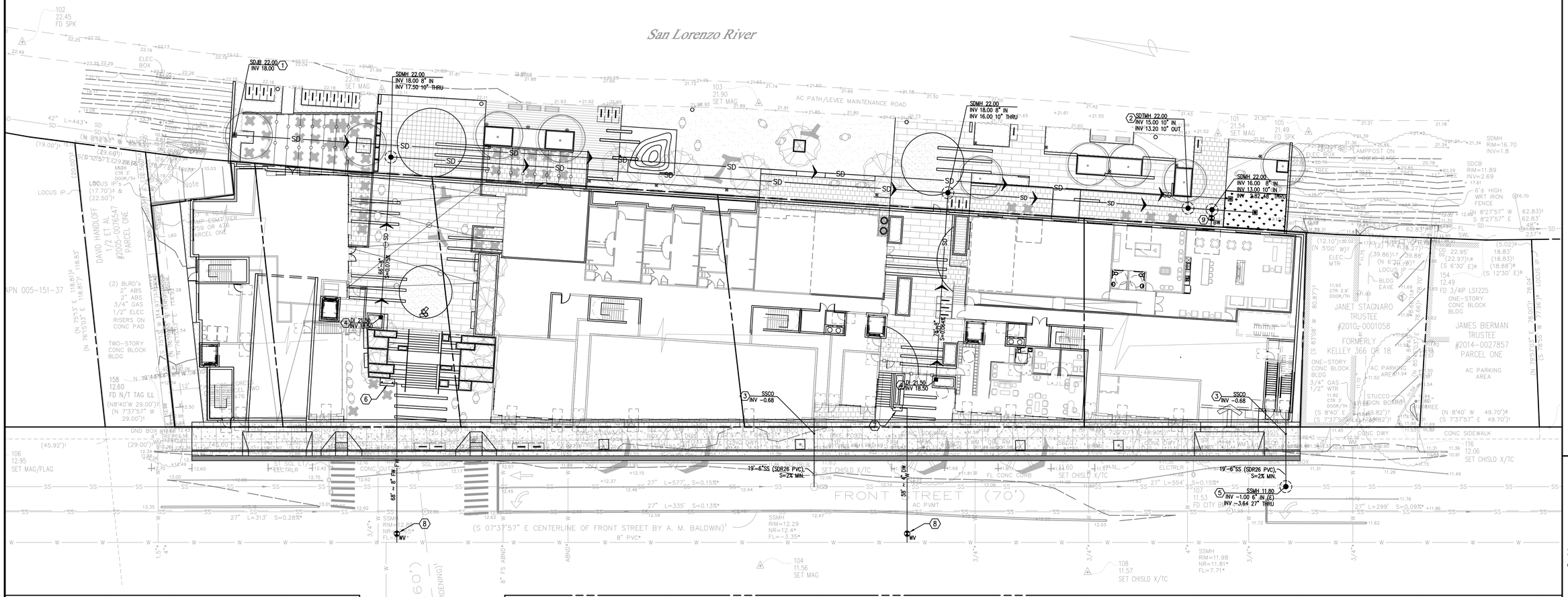

REGISTERED PROFESSIONAL ENGINEER MITCHEL W. BUSLEY No. 57874 Exp. 6-30-20 CIVIL STATE OF CALIFORNIA

BKF 100+ YEARS
1730 NORTH FIRST ST., SUITE 600
SAN JOSE, CA 95112
(408) 467-9100
www.bkf.com
ENGINEERS . SURVEYORS . PLANNERS

TENTATIVE MAP / RIVERFRONT PROJECT
412, 418, 428, 440, 504, AND 508 FRONT STREET
UTILITY PLAN

SANTA CRUZ COUNTY CALIFORNIA

SANTA CRUZ

Revisions	No.

Date	06/13/19
Scale	1" = 20'
Design	MWB
Drawn	.
Approved	.
Job No	20176131

Drawing Number:

C6.1

7 OF 9

DRAWING NAME: K:\2017\176131_Riverfront_Apt_Santa_Cruz\ENG\BASE_FILES\RFTENTMAP.dwg
PLOT DATE: 06-13-19 PLOTTED BY: BUR

© BKF Engineers

TABLE 1

TREATMENT CONTROL MEASURE SUMMARY TABLE

DRAINAGE AREAS	DRAINAGE AREA SIZE (SQ. FT.)	PERVIOUS SURFACE (SQ. FT.)	TYPE OF PERVIOUS SURFACE	IMPERVIOUS SURFACE (SQ. FT.)	TYPE OF IMPERVIOUS SURFACE	WATER QUANTITY (FLOW AND/OR VOLUME GENERATED)		PROPOSED TREATMENT CONTROLS	CONFORMS TO SIZE STANDARD?
						REQUIRED	PROVIDED		
A–1	15,493	7,427	LANDSCAPE	8,066	CONCRETE	352 SF	383 SF	SCM–1 BIORETENTION BASIN 1	YES
A–2	42,684	0	N/A	42,684	ROOF CONCRETE	0.18 CFS	0.21 CFS	SCM–2 PERK FILTER MANHOLE 1	YES

TABLE 2

TIER 3 SIMPLE METHOD CALC		
i	0.521	=total imperv (8066 sf)/total lot size (15493 sf)
C	0.353	=(0.858*I^3)-(0.78*I^2)+(0.774*I)+0.04
Rainfall depth, d (ft)	0.167	=2"/12 Santa Cruz 95TH percentile - WMZ 1,4 & 10
Tributary Area, A (sf)	6945	=New imperv (6202 sf)+ 0*Replaced imperv (1864 sf) + 0.1*new pervious (7427 sf)
Retention Volume (cf)	**408**	=C*d*A
Retention Volume - void ratio included (cf)	**1020**	=Volume/0.4
Area of Basin Required (sf)	**352**	= 4% (total imperv+ 0.1*total perv)
Area of Basin Provided (sf)	**383**	≥ Area of basin required
Depth of Rock (ft)	**2.7**	=Retention volume/Area of basin provided

NOTES:

1. CALCULATIONS WERE DONE PER CHAPTER 6B OF THE BEST MANAGEMENT PRACTICES MANUAL FOR THE CITY'S STORM WATER MANAGEMENT PROGRAM.
2. THE PROJECT RUNOFF DISCHARGES INTO 48" CITY STORM DRAIN LINE, AND OUTFALLS DIRECTLY INTO THE SAN LORENZO RIVER, THEREFORE THIS PROJECT IS NOT SUBJECT TO TIER 4 REQUIREMENTS: PEAK MANAGEMENT.
3. MAINTENANCE ACCESS TO SCM–1 AND SCM–2 SHALL BE AVAILABLE FROM SAN LORENZO RIVER LEVEE TRAIL DRIVEWAY AT SOQUEL AVENUE.

LEGEND

- PROJECT PROPERTY LINE
- RETAINING WALL
- DRAINAGE RELEASE PATH
- CATCH BASIN
- AREA DRAIN
- DRAINAGE MANAGEMENT AREA BOUNDARY — A-X
- STORMWATER CONTROL MEASURE — SCM-#
- STORM DRAIN LINE (UNTREATED) — SD
- TRENCH DRAIN

1"= 20'

GRAPHIC SCALE

20 0 20 40

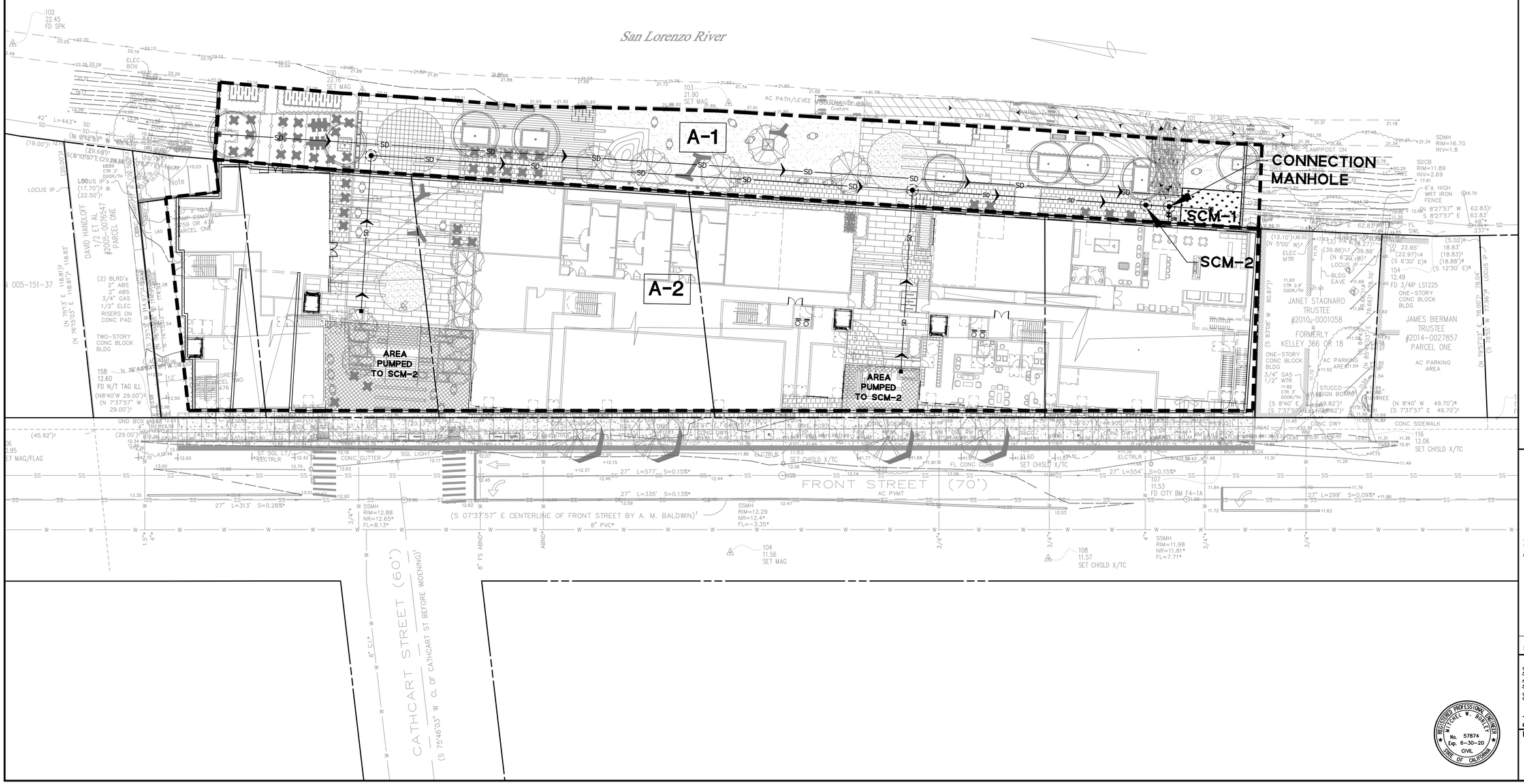

DRAWING NAME: K:\2017\176131_Riverfront_Apt_Santa_Cruz\ENG\BASE_FILES\RFTENTMAP.dwg
PLOT DATE: 06-13-19 PLOTTED BY: BUR

BKF 100+ YEARS
1730 NORTH FIRST ST., SUITE 600
SAN JOSE, CA 95112
(408) 467-9100
www.bkf.com
ENGINEERS . SURVEYORS . PLANNERS

TENTATIVE MAP / RIVERFRONT PROJECT
412, 418, 428, 440, 504, AND 508 FRONT STREET
STORMWATER CONTROL PLAN

SANTA CRUZ COUNTY CALIFORNIA

SANTA CRUZ

Revisions

No.	

Date 06/13/19
Scale 1" = 20'
Design MWB
Drawn .
Approved .
Job No 20176131

REGISTERED PROFESSIONAL ENGINEER MITCHEL W. BAILEY No. 57874 Exp. 6-30-20 CIVIL STATE OF CALIFORNIA

Drawing Number:
C7.1
8 OF 9

© BKF Engineers

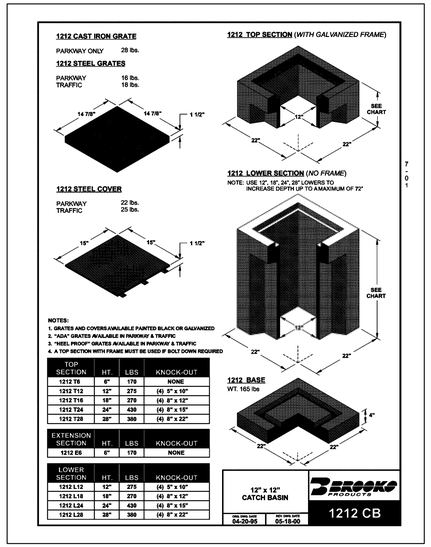

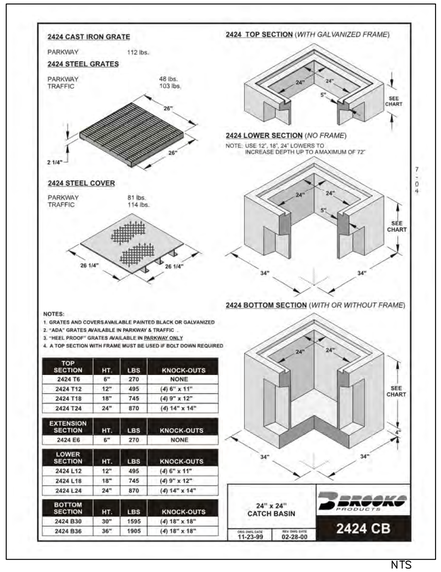

NTS

1 CATCH BASIN/ DROP INLET/ JUNCTION BOX DETAIL

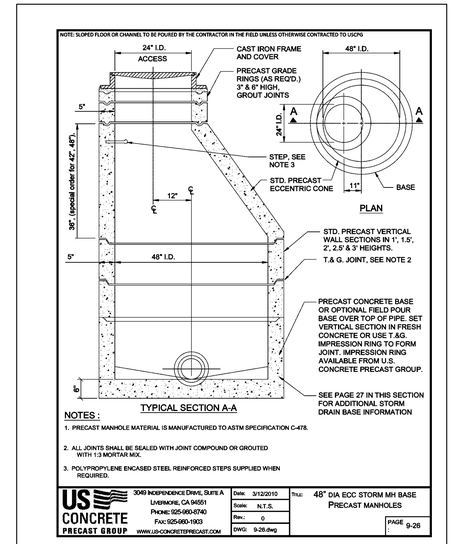

NTS

2 STORM DRAIN MANHOLE

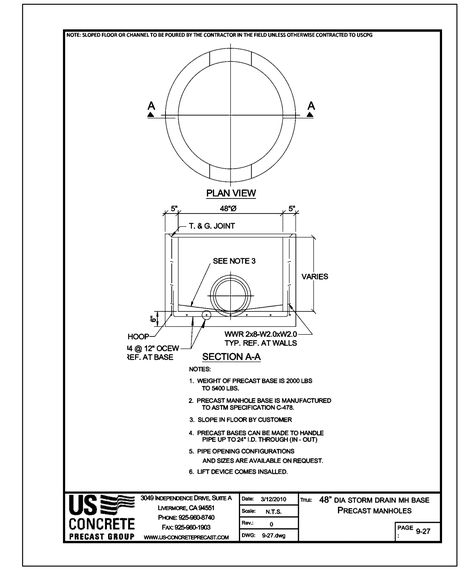

NTS

3 SDMH BASE

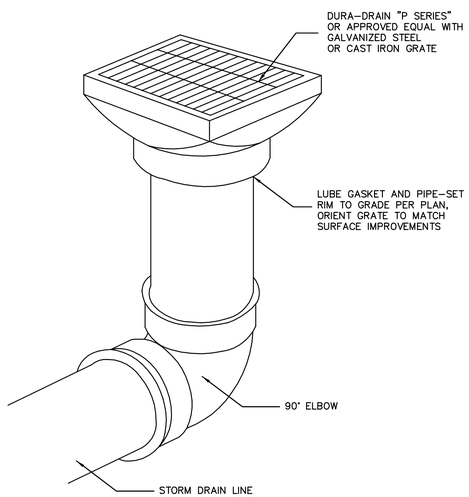

NTS

4 LANDSCAPE AREA DRAIN

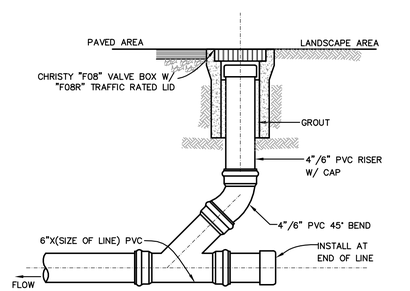

NTS

5 STORM DRAIN/SANITARY SEWER CLEANOUT

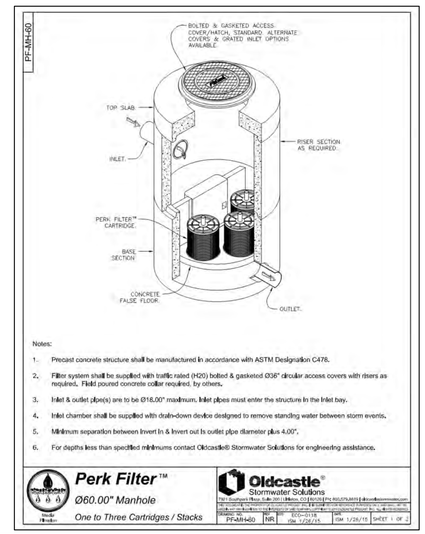

NTS

6 SD TREATMENT MANHOLE

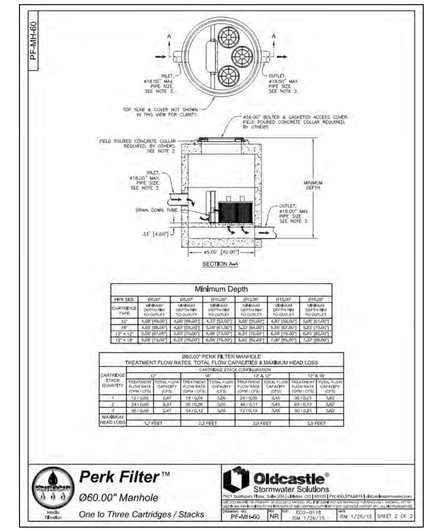

NTS

7 OVERFLOW DRAIN

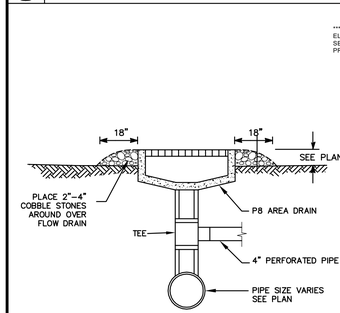

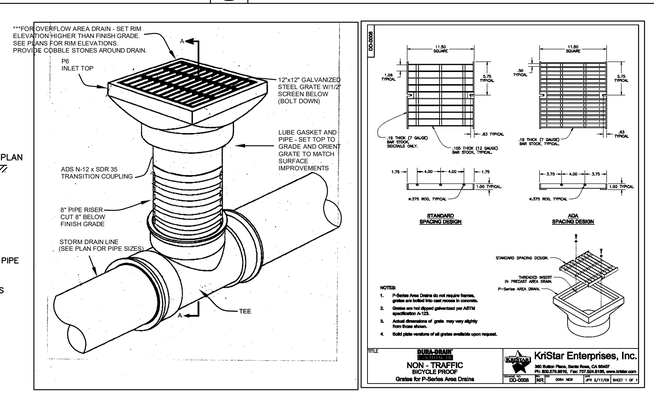

8 BIORETENTION BASIN DETAIL

NOTES

1. TREATMENT SOIL MIX SHALL MEET REQUIREMENTS AS SPECIFIED IN CHAPTER 6B OF THE BEST MANAGEMENT PRACTICES MANUAL FOR THE CITY OF SANTA CRUZ.
2. THE BIOTREATMENT SOIL MIX USED IN ALL BIORETENTION AREAS SHALL COMPLY WITH THE SPECIFICATIONS IN ATTACHMENT L OF THE RWQCB MUNICIPAL REGIONAL PERMIT. IF THE BIOTREATMENT SOIL MIX SUPPLIER IS INCLUDED ON SCVURPPP'S "BIOTREATMENT SOIL MIX SUPPLIER LIST" (SUPPLIER LIST), A BIOTREATMENT SOIL MIX SUPPLIER CERTIFICATION STATEMENT (CERTIFICATION STATEMENT) SHALL BE COMPLETED BY THE SUPPLIER AND SUBMITTED TO THE CITY/PROJECT ENGINEER A MINIMUM OF 14 DAYS PRIOR TO DELIVERY OF THE MATERIAL TO THE JOB SITE. IF THE BIOTREATMENT SOIL MIX SUPPLIER IS NOT INCLUDED ON THE SUPPLIER LIST, A BIOTREATMENT SOILS MIX VERIFICATION CHECKLIST (VERIFICATION CHECKLIST) SHALL BE COMPLETED BY THE SUPPLIER AND SUBMITTED TO THE CITY/PROJECT ENGINEER A MINIMUM OF 14 DAYS PRIOR TO DELIVERY OF THE MATERIAL TO THE JOB SITE. COPIES OF THE SUPPLIER LIST, CERTIFICATION STATEMENT AND VERIFICATION CHECKLIST CAN BE DOWNLOADED FROM THE COUNTYWIDE PROGRAM'S WEBSITE AT HTTP://WWW.SCVURPPP-W2K.COM/ND_WP.SHTML
3. PERFORATED PIPE SHALL BE SOLVENT WELD PVC SDR 35 (OR APPROVED EQUAL) WITH PERFORATIONS FACED DOWN. LOCATION OF THE PIPE VARIES, SEE PLAN.
4. FOR ANY LINER PENETRATIONS, RADIAL-CUT THE LINER FOR PIPE. MASTIC AND SEAL WITH PIPE CLAMP TO INSURE WATER-TIGHT SEAL.
5. MAINTAIN SPECIFIED DEPTH BENEATH PERFORATED PIPE.

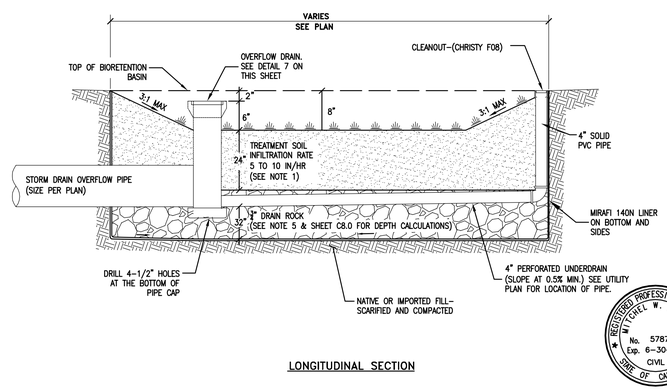

BKF 100 YEARS
1730 NORTH FIRST ST., SUITE 600
SAN JOSE, CA 95112
(408) 467-9100
www.bkf.com
ENGINEERS . SURVEYORS . PLANNERS

TENTATIVE MAP / RIVERFRONT PROJECT
412, 418, 428, 440, 504, AND 508 FRONT STREET
CIVIL DETAILS
SANTA CRUZ COUNTY, CALIFORNIA

SANTA CRUZ

Revisions | No.

Date 06/13/19
Scale AS SHOWN
Design MWB
Drawn .
Approved .
Job No 20176131

REGISTERED PROFESSIONAL ENGINEER MICHAEL W. BULLEY No. 57874 Exp. 6-30-20 CIVIL STATE OF CALIFORNIA

Drawing Number:
C9.1
9 OF 9

DRAWING NAME: K:\2017\176131_Riverfront_Apt_Santa_Cruz\ENG\BASE_FILES\RFTENTMAP.dwg
PLOT DATE: 06-13-19 PLOTTED BY: BUR

© BKF Engineers

1 CATCH BASIN/ DROP INLET/ JUNCTION BOX DETAIL

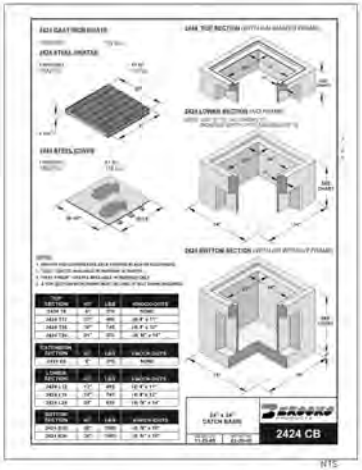

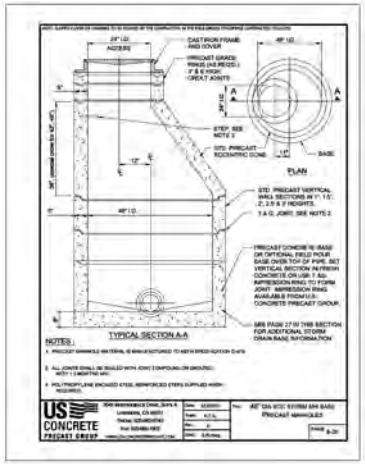

2 STORM DRAIN MANHOLE

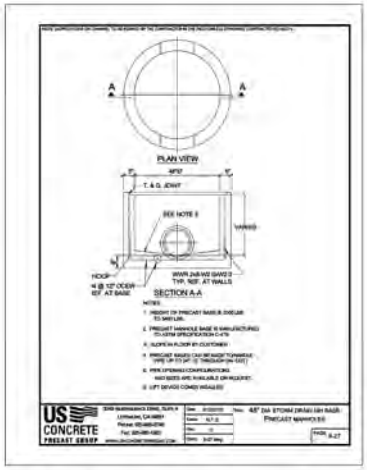

3 SDMH BASE

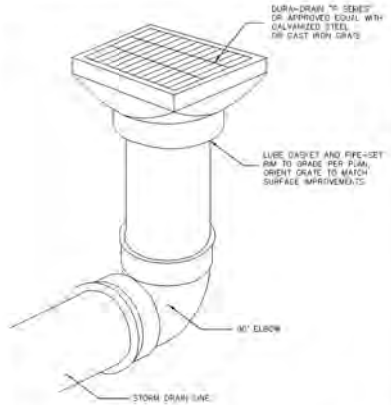

4 LANDSCAPE AREA DRAIN

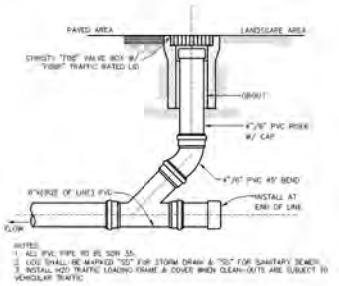

5 STORM DRAIN/SANITARY SEWER CLEANOUT

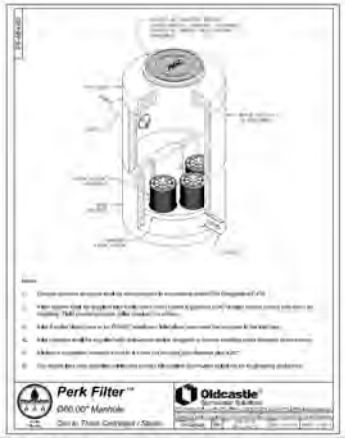

6 SD TREATMENT MANHOLE

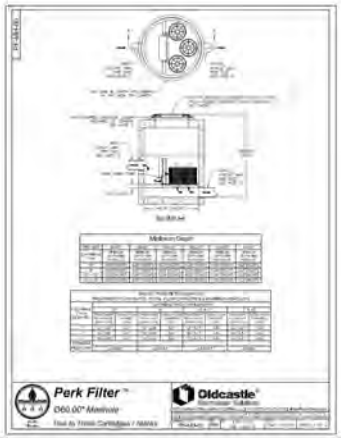

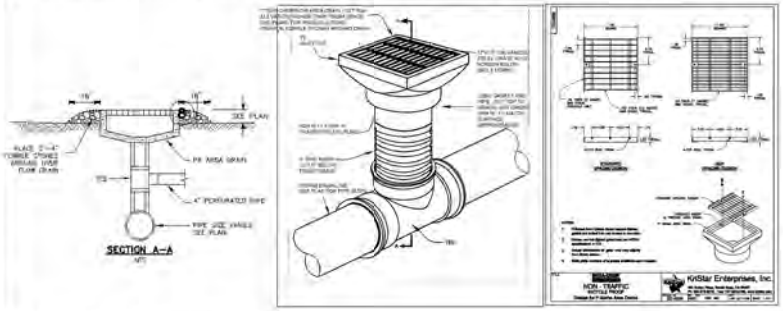

7 OVERFLOW DRAIN

NOTES

1. TREATMENT SOIL MIX SHALL MEET REQUIREMENTS AS SPECIFIED IN CHAPTER 6B OF THE BEST MANAGEMENT PRACTICES MANUAL FOR THE CITY OF SANTA CRUZ.
2. THE BIORETENTION SOIL MIX USED IN ALL BIORETENTION AREAS SHALL COMPLY WITH THE SPECIFICATIONS IN ATTACHMENT L OF THE RWQCB MUNICIPAL REGIONAL PERMIT. IF THE BIORETENTION SOIL MIX SUPPLIER IS INCLUDED ON SCVURPPP'S "BIORETENTION SOIL MIX SUPPLIER LIST" (SUPPLIER LIST), A BIORETENTION SOIL MIX SUPPLIER CERTIFICATION STATEMENT (CERTIFICATION STATEMENT) SHALL BE COMPLETED BY THE SUPPLIER AND SUBMITTED TO THE CITY/PROJECT ENGINEER A MINIMUM OF 14 DAYS PRIOR TO DELIVERY OF THE MATERIAL TO THE JOB SITE. IF THE BIORETENTION SOIL MIX SUPPLIER IS NOT INCLUDED ON THE SUPPLIER LIST, A BIORETENTION SOILS MIX VERIFICATION CHECKLIST (VERIFICATION CHECKLIST) SHALL BE COMPLETED BY THE SUPPLIER AND SUBMITTED TO THE CITY/PROJECT ENGINEER A MINIMUM OF 14 DAYS PRIOR TO DELIVERY OF THE MATERIAL TO THE JOB SITE. COPIES OF THE SUPPLIER LIST, CERTIFICATION STATEMENT, AND VERIFICATION CHECKLIST CAN BE DOWNLOADED FROM THE COUNTYWIDE PROGRAM'S WEBSITE AT HTTP://WWW.SCVURPPP-W2K.COM/M4_MP.CFM#.
3. PERFORATED PIPE SHALL BE SOLVENT WELD PVC SDR 35 (OR APPROVED EQUAL) WITH PERFORATIONS FACED DOWN. LOCATION OF THE PIPE VARIES, SEE PLAN.
4. FOR ANY LINER PENETRATIONS (RAINA), CUT THE LINER FOR PIPE. MASTIC AND SEAL WITH PIPE CLAMP TO ENSURE WATER-TIGHT SEAL.
5. MAINTAIN SPECIFIED DEPTH BENEATH PERFORATED PIPE.

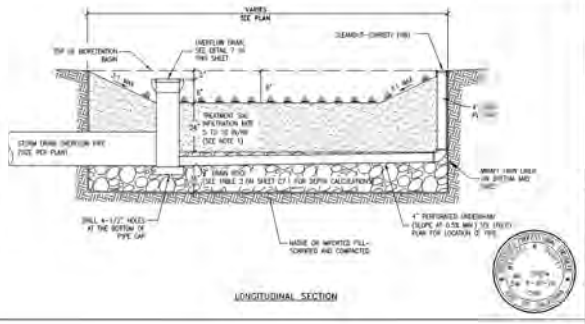

8 BIORETENTION BASIN DETAIL

BKF 100 YEARS
ENGINEERS · SURVEYORS · PLANNERS
1730 NORTH FIRST ST., SUITE 600
SAN JOSE, CA 95112
(408) 467-9100
www.bkf.com

RIVERFRONT PROJECT
412, 418, 428, 440, 504, AND 508 FRONT STREET
CIVIL DETAILS
SANTA CRUZ COUNTY, CALIFORNIA

No.	Revisions

Date: 10/10/18
Scale: AS SHOWN
Design: MBE
Drawn:
Approved:
Job No. 2017614

Drawing Number: C9.1

12 of 13

© BKF Engineers

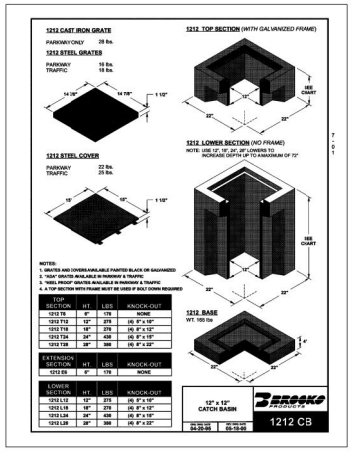

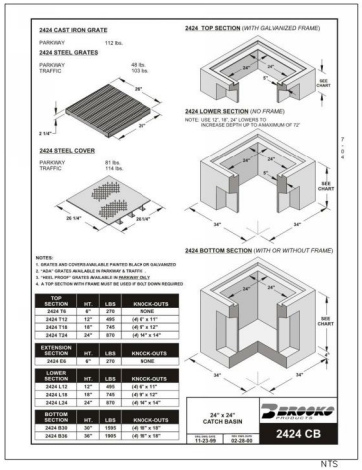

NTS

1 CATCH BASIN/ DROP INLET/ JUNCTION BOX DETAIL

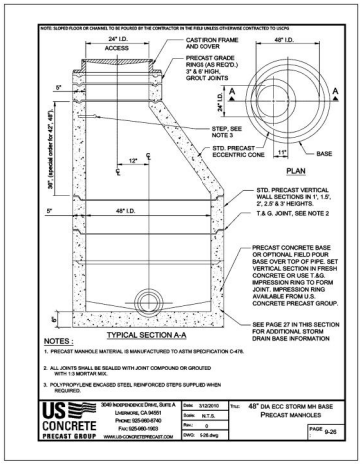

NTS

2 STORM DRAIN MANHOLE

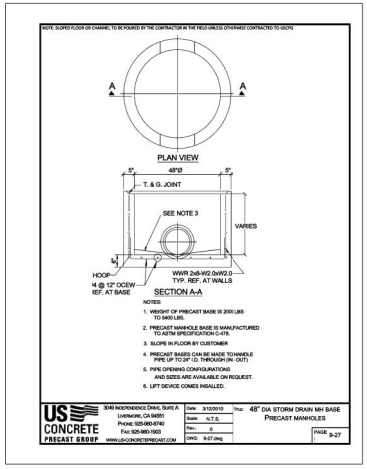

NTS

3 SDMH BASE

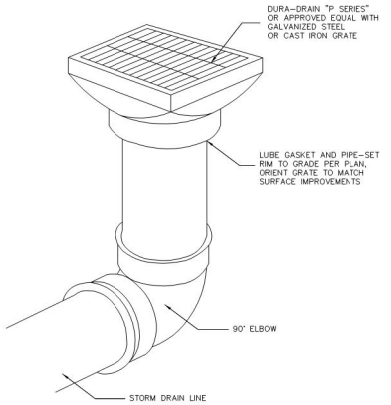

NTS

4 LANDSCAPE AREA DRAIN

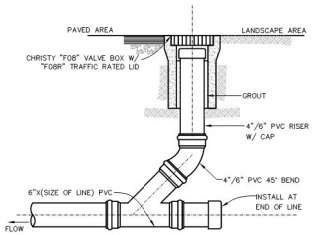

NOTES:
1. ALL PVC PIPE TO BE SDR 35.
2. LIDS SHALL BE MARKED "SD" FOR STORM DRAIN & "SS" FOR SANITARY SEWER.
3. INSTALL H20 TRAFFIC LOADING FRAME & COVER WHEN CLEAN-OUTS ARE SUBJECT TO VEHICULAR TRAFFIC

NTS

5 STORM DRAIN/SANITARY SEWER CLEANOUT

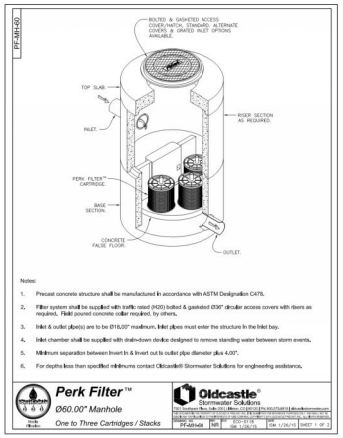

NTS

6 SD TREATMENT MANHOLE

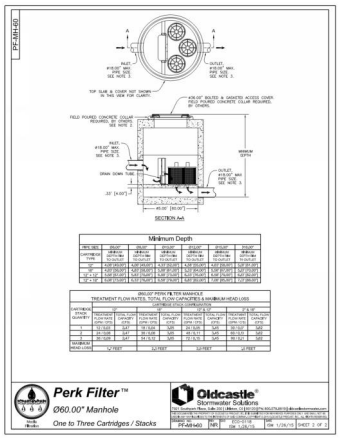

NTS

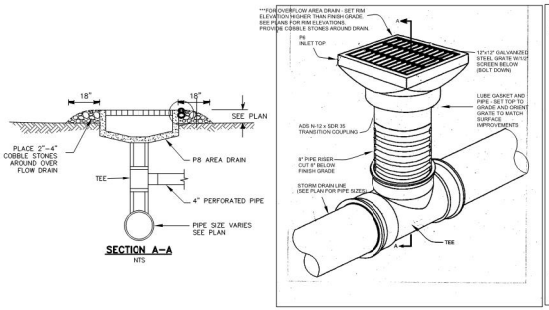

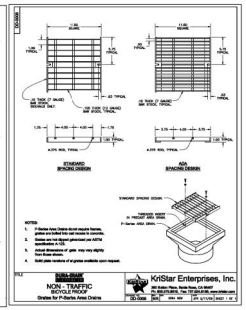

7 OVERFLOW DRAIN

NOTES

1. TREATMENT SOIL MIX SHALL MEET REQUIREMENTS AS SPECIFIED IN CHAPTER 6B OF THE BEST MANAGEMENT PRACTICES MANUAL FOR THE CITY OF SANTA CRUZ.
2. THE BIOTREATMENT SOIL MIX USED IN ALL BIORETENTION AREAS SHALL COMPLY WITH THE SPECIFICATIONS IN ATTACHMENT L OF THE RWQCB MUNICIPAL REGIONAL PERMIT. IF THE BIOTREATMENT SOIL MIX SUPPLIER IS INCLUDED ON SCVURPPP'S "BIOTREATMENT SOIL MIX SUPPLIER LIST" (SUPPLIER LIST), A BIOTREATMENT SOIL MIX SUPPLIER CERTIFICATION STATEMENT (CERTIFICATION STATEMENT) SHALL BE COMPLETED BY THE SUPPLIER AND SUBMITTED TO THE CITY/PROJECT ENGINEER A MINIMUM OF 14 DAYS PRIOR TO DELIVERY OF THE MATERIAL TO THE JOB SITE. IF THE BIOTREATMENT SOIL MIX SUPPLIER IS NOT INCLUDED ON THE SUPPLIER LIST, A BIOTREATMENT SOILS MIX VERIFICATION CHECKLIST (VERIFICATION CHECKLIST) SHALL BE COMPLETED BY THE SUPPLIER AND SUBMITTED TO THE CITY/PROJECT ENGINEER A MINIMUM OF 14 DAYS PRIOR TO DELIVERY OF THE MATERIAL TO THE JOB SITE. COPIES OF THE SUPPLIER LIST, CERTIFICATION STATEMENT AND VERIFICATION CHECKLIST CAN BE DOWNLOADED FROM THE COUNTYWIDE PROGRAM'S WEBSITE AT HTTP://WWW.SCVURPPP-WQX.COM/ND_MP.SHTML
3. PERFORATED PIPE SHALL BE SOLVENT WELD PVC SDR 35 (OR APPROVED EQUAL) WITH PERFORATIONS FACED DOWN. LOCATION OF THE PIPE VARIES, SEE PLAN.
4. FOR ANY LINER PENETRATIONS, RADIAL-CUT THE LINER FOR PIPE. MASTIC AND SEAL WITH PIPE CLAMP TO INSURE WATER-TIGHT SEAL.
5. MAINTAIN SPECIFIED DEPTH BENEATH PERFORATED PIPE.

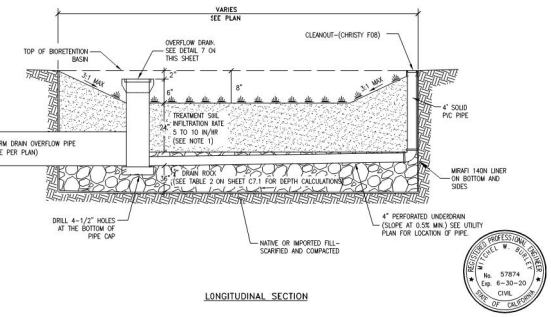

LONGITUDINAL SECTION

8 BIORETENTION BASIN DETAIL

BKF 100 YEARS
1730 NORTH FIRST ST., SUITE 600
SAN JOSE, CA 95112
(408) 467-9100
www.bkf.com
ENGINEERS. SURVEYORS. PLANNERS

RIVERFRONT PROJECT
412, 418, 428, 440, 504, AND 508 FRONT STREET
CIVIL DETAILS
SANTA CRUZ COUNTY, CALIFORNIA

Revisions | No.

Date 10/10/19
Scale AS SHOWN
Design MWB
Drawn
Approved
Job No 20176131

Drawing Number: C9.1

12 OF 13

DRAWING NAME: K:\2017\176131_Riverfront_Apt_Santa_Cruz\ENG\BASE_FILES\RFC1\PLANS01.dwg
PLOT DATE: 10-10-19 PLOTTED BY: BUR

© BKF Engineers

TENTATIVE MAP
RIVERFRONT PROJECT
412-508 FRONT STREET
SANTA CRUZ, CA 95060

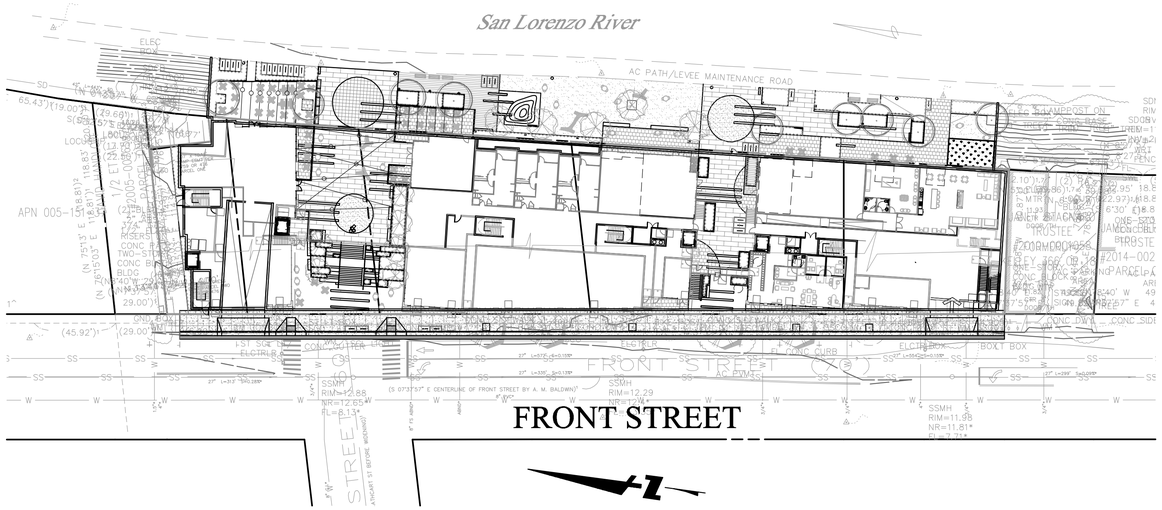

SITE MAP
1"=40'

ABBREVIATIONS

AB	AGGREGATE BASE	LG	LIP OF GUTTER
AC	ASPHALT CONCRETE	LP	LOW POINT
ACC	ACCESSIBLE	MH	MANHOLE
ACP	ASBESTOS CEMENT PIPE	N	NORTH
AD	AREA DRAIN	(N)	NEW
ALT	ALTERNATIVE	NTS	NOT TO SCALE
BC	BACK OF CURB	OH	OVERHEAD (WIRES)
BFP	BACKFLOW PREVENTER	PB	PULL BOX
BLDG	BUILDING	PP	POWER POLE
BOT	BOTTOM	(P)	PROPOSED
BW	BOTTOM OF WALL/BACK OF WALK	P/L	PROPERTY LINE
CB	CATCH BASIN	PCC	PORTLAND CEMENT CONCRETE
CI	CURB INLET	P/SBC	POWER/SBC TRENCH
CLR	CLEAR (OD TO OD)	P.F.S.E.	PRIVATE FIRE SERVICE EASEMENT
C&G	CURB AND GUTTER	P.I.E.E.	PRIVATE INGRESS, EGRESS EASEMENT
℄,CL	CENTERLINE	P.S.D.E.	PRIVATE STORM DRAIN EASEMENT
CLF	CHAIN LINK FENCE	P.S.S.E.	PRIVATE SANITARY SEWER EASEMENT
CO	CLEANOUT	P.U.E.	PUBLIC UTILITY EASEMENT
CONC	CONCRETE	PVC	POLYVINYL CHLORIDE PIPE
CONST	CONSTRUCTION	R	RIGHT/RADIUS
CR	CURB RETURN	RCP	REINFORCED CONCRETE PIPE
CW	CROSSWALK	RPA	REDUCED PRESSURE ASSEMBLY
DET/DTL	DETAIL	R/W	RIGHT-OF-WAY
DI	DROP INLET	RWD	REDWOOD
DIP	DUCTILE IRON PIPE	S	SLOPE/SOUTH
D/W	DRIVEWAY	SD	STORM DRAIN
DWG	DRAWING	SDMH	STORM DRAIN MANHOLE
E	EAST/ELECTRIC	SF	SQUARE FEET
(E),EX	EXISTING	SG	SUBGRADE
ELEC	ELECTRIC	SHT	SHEET
ELEV	ELEVATION	S/L	STREET LIGHT
EP	EDGE OF PAVEMENT	SLB	STREET LIGHT BOX
E.V.A.E.	EMERGENCY VEHICLE ACCESS EASEMENT	SLD	SEE LANDSCAPE DRAWINGS
FC	FACE OF CURB	SL	STREET LIGHT CONDUIT
FDC	FIRE DEPT CONNECTION	SS	SANITARY SEWER
FF	FINISH FLOOR	SSCO	SANITARY SEWER CLEANOUT
FG	FINISHED GRADE	SSMH	SANITARY SEWER MANHOLE
FH	FIRE HYDRANT	ST	STREET
FL	FLOWLINE	STD	STANDARD
FT	FEET	S/W	SIDEWALK
FW	FIRE WATER	T, TEL	TELEPHONE
G	GAS	TC	TOP OF CURB
GB	GRADE BREAK	TH	TOP OF HEADER
GR	GRATE	TRC	TOP OF ROLLED CURB
GRD	GROUND	TS	TOP OF STEP
GS	GARAGE SLAB	TSW	TOP OF SCREEN WALL
GYW	GUY WIRE	TW	TOP OF WALL
HP	HIGH POINT	TYP	TYPICAL
I.E.E.	INGRESS, EGRESS EASEMENT	UG	UNDERGROUND
INV	INVERT (ELEVATION)	VCP	VITRIFIED CLAY PIPE
IRR	IRRIGATION	W	WATER/WEST
JP	JOINT UTILITY POLE	WM	WATER METER
JT	JOINT UTILITY TRENCH	WV	WATER VALVE
LAT	LATERAL	XWALK	CROSSWALK
LF	LINEAL FEET		

SHEET INDEX

TM 1.1	TITLE SHEET	TM 5.2	SITE SECTIONS
TM 2.1	EXISTING CONDITION PLAN	TM 6.1	UTILITY PLAN
TM 3.1	LOT LAYOUT PLAN	TM 7.1	STORMWATER CONTROL PLAN
TM 4.1	SITE PLAN	TM 7.2	CIVIL DETAILS
TM 5.1	GRADING PLAN		

GENERAL NOTES

1. TENTATIVE MAP: THIS TENTATIVE MAP IS BEING FILED IN ACCORDANCE WITH CHAPTER 3, ARTICLE 2, SECTION 66452 OF THE SUBDIVISION MAP ACT.
2. TENTATIVE MAP: THIS TENTATIVE MAP CONFORMS TO THE REQUIREMENTS OF CHAPTER 23.16.020 "TENTATIVE SUBDIVISION MAPS" OF THE CITY OF SANTA CRUZ MUNICIPAL CODE.
3. CONDOMINIUM: LOT 1 ON SHEET 3.1 IS SUBDIVIDED FOR CONDOMINIUM PURPOSES WITH A MAXIMUM OF 175 RESIDENTIAL CONDOMINIUM UNITS AND 8 COMMERCIAL CONDOMINIUM UNITS.
4. TOPOGRAPHY: TOPOGRAPHIC MAPPING WAS PERFORMED BY BOWMAN & WILLIAMS, 1011 CEDAR STREET, SANTA CRUZ, CA 95060. SURVEY DATE: 4/04/2016.
5. BENCHMARK: BM F4-1A ELEVATION 11.526 NGVD29. EASTSIDE FRONT STREET OPPOSITE METRO CENTER.
6. BOUNDARY: BOUNDARY AND EASEMENTS SHOWN PER BOWMAN & WILLIAMS, 1011 CEDAR STREET, SANTA CRUZ, CA 95060. SURVEY DATE: 4/04/2016.
7. UTILITIES: UTILITY SIZING AND LOCATIONS ARE PRELIMINARY AND SUBJECT TO FINAL ENGINEERING DESIGN.
8. LOTS: THE PROJECT WILL MERGE FIVE (5) EXISTING LOTS AND CREATE ONE (1) LOT FOR CONDOMINIUM PURPOSES.
9. EASEMENTS: EASEMENTS HAVE BEEN PROPOSED FOR PUBLIC ACCESS AND EMERGENCY VEHICLE ACCESS OVER PRIVATE LOT 1.

SUBDIVIDER'S STATEMENT

OWNER/SUBDIVIDER:	OWEN LAWLOR LAWLOR LAND USE 612 SPRING STREET SANTA CRUZ, CA 95060 TEL: (831) 457-1331
ENGINEER:	BKF ENGINEERS 1730 NORTH FIRST STREET SUITE 600 SAN JOSE, CA 95112 TEL: (408) 467-9100 ATTN: MITCH BURLEY
AREA:	ACREAGE - 1.04 AC
ASSESSORS PARCEL NO:	005-151-22, 30, 31, 39 AND 50
ZONE DISTRICT:	CBD: CENTRAL BUSINESS DISTRICT
SETBACKS:	SANTA CRUZ ZONING ORDINANCE/DEVELOPMENT AGREEMENT
EXISTING USE:	COMMERCIAL
PROPOSED USE:	175 RESIDENTIAL CONDOMINIUM UNITS (MAXIMUM) AND 8 COMMERCIAL USES (LOT 1)
PROPOSED IMPROVEMENTS:	DEMOLISH EXISTING BUILDINGS AND SITE IMPROVEMENTS AND MERGE FIVE (5) EXISTING PARCELS FOR THE CONSTRUCTION OF 175 RESIDENTIAL UNITS, 8 COMMERCIAL UNITS AND CONSTRUCT STREET INFRASTRUCTURE AND PROVIDE UTILITY SERVICES. INCLUDING STORM, SANITARY, WATER, GAS, ELECTRIC AND TELEPHONE.

SURVEYOR'S STATEMENT

THIS TENTATIVE MAP HAS BEEN PREPARED BY ME OR UNDER MY DIRECTION IN ACCORDANCE WITH THE STATE OF CALIFORNIA SUBDIVISION MAP ACT.

DAVIS THRESH, L.S.
ASSOCIATE/PROJECT MANAGER
BKF ENGINEERS

DATE

REGISTERED LAND SURVEYOR
DAVIS THRESH
EXP. 9/30/20
No. 6868
STATE OF CALIFORNIA

ENGINEER'S STATEMENT

THIS TENTATIVE MAP HAS BEEN PREPARED BY ME OR UNDER MY DIRECTION IN ACCORDANCE WITH STANDARD ENGINEERING PRACTICE.

MITCHEL W. BURLEY, P.E.
PROJECT MANAGER
BKF ENGINEERS

DATE

REGISTERED PROFESSIONAL ENGINEER
MITCHEL W. BURLEY
No. 57874
Exp. 6-30-20
CIVIL
STATE OF CALIFORNIA

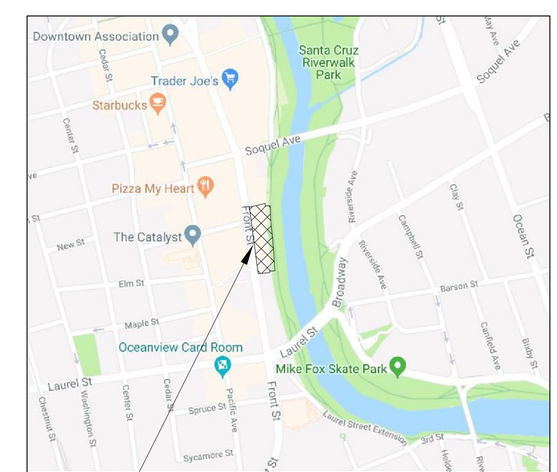

VICINITY MAP
N.T.S.

BKF 100 YEARS
ENGINEERS . SURVEYORS . PLANNERS
1730 NORTH FIRST ST., SUITE 600
SAN JOSE, CA 95112
(408) 467-9100
www.bkf.com

TENTATIVE MAP / RIVERFRONT PROJECT
412, 418, 428, 440, 504, AND 508 FRONT STREET
TITLE SHEET
SANTA CRUZ COUNTY CALIFORNIA

Revisions	No.

Date 06/13/19
Scale AS SHOWN
Design MWB
Drawn .
Approved .
Job No 20176131

Drawing Number:
C1.1
1 OF 9

DRAWING NAME: K:\2017\176131_Riverfront_Apt_Santa_Cruz\ENG\BASE_FILES\RFTENTMAP.dwg
PLOT DATE: 06-14-19 PLOTTED BY: BUR

© BKF Engineers

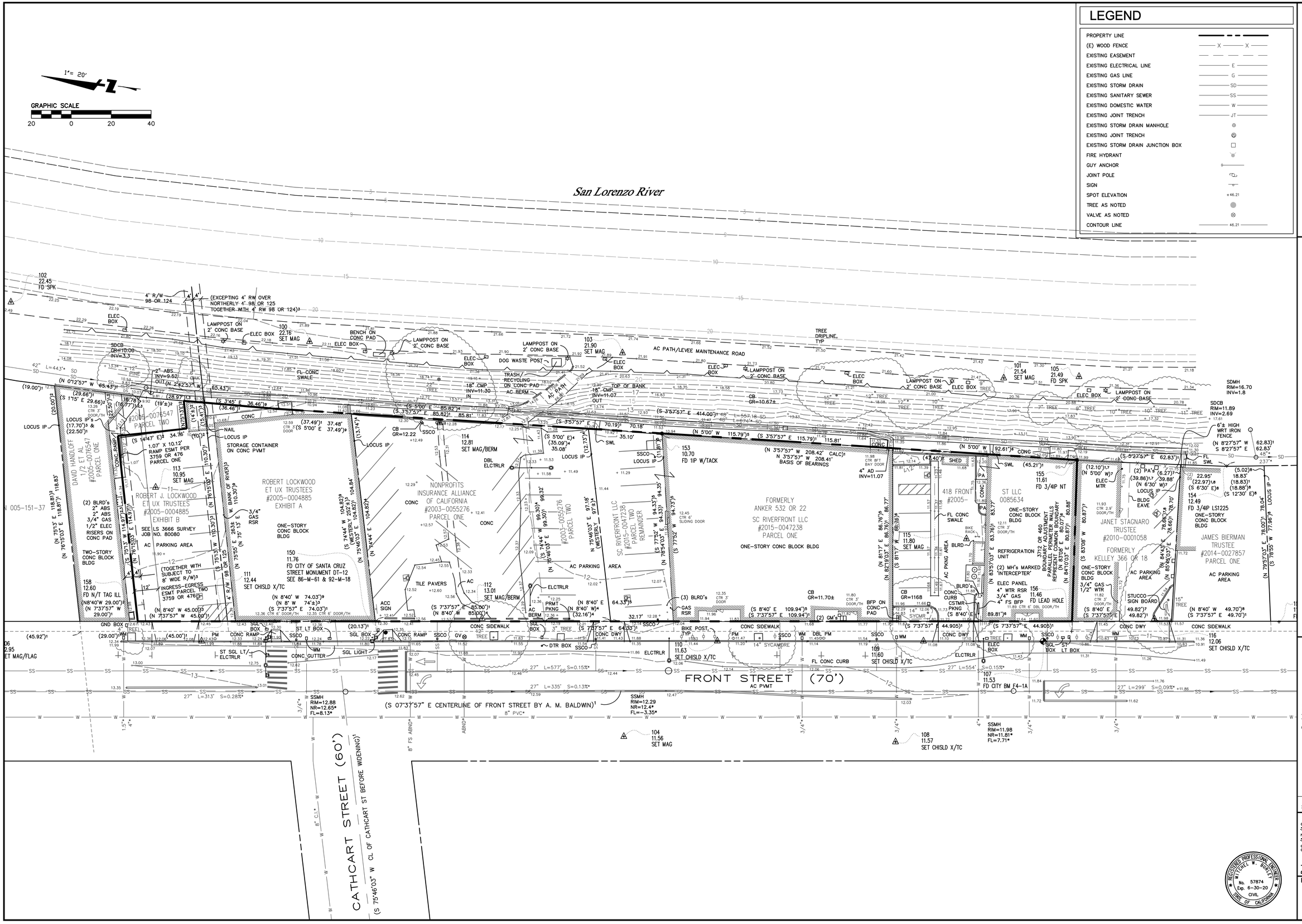

LEGEND

PROPERTY LINE	
(E) WOOD FENCE	X X
EXISTING EASEMENT	
EXISTING ELECTRICAL LINE	E
EXISTING GAS LINE	G
EXISTING STORM DRAIN	SD
EXISTING SANITARY SEWER	SS
EXISTING DOMESTIC WATER	W
EXISTING JOINT TRENCH	JT
EXISTING STORM DRAIN MANHOLE	
EXISTING JOINT TRENCH	
EXISTING STORM DRAIN JUNCTION BOX	
FIRE HYDRANT	
GUY ANCHOR	
JOINT POLE	
SIGN	
SPOT ELEVATION	+46.21
TREE AS NOTED	
VALVE AS NOTED	
CONTOUR LINE	46.21

BKF 100+ YEARS
1730 NORTH FIRST ST., SUITE 600
SAN JOSE, CA 95112
(408) 467-9100
www.bkf.com
ENGINEERS . SURVEYORS . PLANNERS

TENTATIVE MAP / RIVERFRONT PROJECT
412, 418, 428, 440, 504, AND 508 FRONT STREET
EXISTING CONDITION PLAN

SANTA CRUZ COUNTY, CALIFORNIA

SANTA CRUZ

Revisions

No.	

Date 06/13/19
Scale 1" = 20'
Design MWB
Drawn
Approved
Job No 20176131

Drawing Number: C2.1

2 OF 9

DRAWING NAME: K:\2017\176131_Riverfront_Apt_Santa_Cruz\ENG\BASE_FILES\RFTENTMAP.dwg
PLOT DATE: 06-13-19 PLOTTED BY: BUR

© BKF Engineers

1"= 20'

GRAPHIC SCALE

20 0 20 40

San Lorenzo River

LOT 1
FOR CONDOMINIUM PURPOSES
(175 RESIDENTIAL UNITS, 8 COMMERCIAL UNITS)

PROPOSED PUBLIC ACCESS EASEMENT

PROPOSED PUBLIC ACCESS EASEMENT

S 3°57'57" E 401.90'

S 7°37'57" E 468.11'

FRONT STREET (70')

(S 07°37'57" E CENTERLINE OF FRONT STREET BY A. M. BALDWIN)[1]

CATHCART STREET (60')

(S 75°46'03" W CL OF CATHCART ST BEFORE WIDENING)[1]

ROBERT LOCKWOOD ET UX TRUSTEES #2005-0004885 EXHIBIT A

ROBERT J. LOCKWOOD ET UX TRUSTEES #2005-0004885 EXHIBIT B

SEE LS 3666 SURVEY JOB NO. 80080

DAVID HANDLOFF 1/2 ET AL #2005-0076547 PARCEL ONE

#2005-0076547 PARCEL TWO

NONPROFITS INSURANCE ALLIANCE OF CALIFORNIA #2003-0055276 PARCEL ONE

#2003-0055276 PARCEL TWO

SC RIVERFRONT LLC #2015-0047238 PARCEL TWO REMAINDER

FORMERLY ANKER 532 OR 22 SC RIVERFRONT LLC #2015-0047238 PARCEL ONE

418 FRONT #2005-

ST LLC 0085634

JANET STAGNARO TRUSTEE #2010-0001058 FORMERLY KELLEY 366 OR 18

JAMES BIERMAN TRUSTEE #2014-0027857 PARCEL ONE

3712 OR 460 BOUNDARY ADJUSTMENT PARCEL FORMERLY TWO PARCELS REPRESENT COMMON BOUNDARY

(EXCEPTING 4' RW OVER NORTHERLY 4' 98 OR 125 TOGETHER WITH 4' RW 98 OR 124)[3]

(TOGETHER WITH SUBJECT TO 8' WIDE R/W)[3]

INGRESS-EGRESS ESMT PARCEL TWO 3759 OR 476

RAMP ESMT PER 3759 OR 476 PARCEL ONE

NAIL LOCUS IP

LOCUS IP

LOCUS IP's (17.70')[3] & (22.50')[1]

S 14°47' E)[2] 34.76'

(S 3°45' E 36.46')[9]

(36.46')[1]

(S 75°13' W 114.97')[2,3]

(N 76°15'03" E 114.97')

(N 84°10'03" E 80.87')[1] 80.88'

(N 2°42'57" W 65.43')[1]

(N 0°12'57" W 65.43')[1]

(N 5°00' W 115.79')[5]

(S 3°57'57" E 115.79')[1] 115.81'

(N 3°57'57" W 208.42' CALC)[1]
N 3°57'57" W 208.41'
BASIS OF BEARINGS

(N 5°00' W 92.61')[6]

(S 5°27'57" E 62.83')[1]

(N 8°27'57" W
S 8°27'57" E

(S 7°37'57" E 64.33')[1]

(S 7°37'57" E 44.905')[1]

(S 7°37'57" E 44.905')[1]

(N 8°40' W 45.00')[3]
(N 7°37'57" W 45.00')[1]

(N 8°40' W 74.03')[8]
(N 8°40' W 74'±')[4]
(S 7°37'57" E 74.03')[1]

(S 8°40' E 109.94')[5]
(S 7°37'57" E 109.94')[1]

(S 8°40' E 49.82')[7]
(S 7°37'57" E 49.82')[1]

(N 8°40' W 49.70')[8]
(S 7°37'57" E 49.70')[1]

(N 8°40' W 74.03')[8]
(N 8°40' W 74'±')[4]
(S 7°37'57" E 74.03')[1]

(S 8°40' E 64.33')[5]

(S 7°37'57" E 85.00')[1]
(N 8°40' W 85.00')[4]

(S 5°00' E 85.82')[4]
(S 3°57'57" E 85.82')[1]

(S 3°57'57" E 70.19')[1] 70.18'

(S 5°00' E)[4]
(35.09')[4]
35.08'

(S 3°57'57" E 414.00')[1]

(N 5°00' W 99.30')[1]
(S 74°44' W 99.30')[1]
(S 75°46'03" E 99.30')[1]

(S 77°52' W 94.33')[9]
(S 78°54'03" E 94.33')[1] 94.35'

(S 77°52' W 94.73')[9]
(S 77°52' W 94.73')[1]

(S 81°17' E 86.76')[9]
(N 82°19'03" E 86.76')[1] 86.77'

(S 83°08' W 80.87')[7]
(N 83°57'03" E 83.76')[1] 83.77'

(N 83°43'3" E 78.66')[8]
(N 85°45'03" E 78.66')[1] 78.70'

(N 79°57'03" E 78.00')[1] 78.04'
(S 78°55' W 77.96')[9] LOCUS IP

(N 5°00' W)[7]

(12.10')[1,7]
(N 5°00' W)[7]

(39.86')[1,7] 39.88'
(N 6°30' W)[7]
LOCUS IP

(6.27')[7]

22.95'
(22.97')[1,8]
(S 6°30' E)[8]

(5.02')[8]

(11.81')[9]

(12.73')[9]

(13.74')[9]

(37.49')[1] 37.48'
(S 5°00' E 37.49')[9]

(S 3°57'57" E 85.81')[1]

(S 3°57'57" E 70.18')[1]

(S 3°57'57" E 35.10')[1]

(N 5°00' W 92.61')[1]

(S 5°27'57" E 62.83')[1]

(N 8°27'57" W
S 8°27'57" E

(45.21')[1]

(47.40')[1]

(N 8°40' W 45.00')[3]
(N 7°37'57" W 45.00')[1]

(S 75°13' W 110.30')[3]

(S 76°15'03" E 110.30')[3]

(S 75°13' W 110.30')[3]

(N 76°15'03" E 118.83')[3]

(N 75°13' E 118.81')[3]
(N 76°15'03" E 118.81')[1] 118.83'

(N 005-151-37

(19.00')[1]

(20.00')[3]

(29.66')[1]
(S 1°15' E 29.66')[2]

16.78
(16.77')[1,2,3]

(22.50')[3]

(19'±')[2]

(28.92')[1] 10.16'

(N 2°42'57" W 65.43')[1]

(N 0°12'57" W 65.43')[1]

(N 5°00' W 115.79')[5]

(S 3°57'57" E 115.79')[1] 115.81'

(N 3°57'57" W 208.42' CALC)[1]
N 3°57'57" W 208.41'
BASIS OF BEARINGS

(N 5°00' W 92.61')[6]

(S 5°27'57" E 62.83')[1]

(N 8°27'57" W
S 8°27'57" E

(45.21')[1]

(47.40')[1]

(S 7°37'57" E 64.33')[1]

(S 7°37'57" E 44.905')[1]

(S 7°37'57" E 44.905')[1]

(N 8°40' W 45.00')[3]
(N 7°37'57" W 45.00')[1]

(N 8°40' W 74.03')[8]
(N 8°40' W 74'±')[4]
(S 7°37'57" E 74.03')[1]

(S 8°40' E 109.94')[5]
(S 7°37'57" E 109.94')[1]

(S 8°40' E 49.82')[7]
(S 7°37'57" E 49.82')[1]

(N 8°40' W 49.70')[8]
(S 7°37'57" E 49.70')[1]

(N 8°40' W 74.03')[8]
(N 8°40' W 74'±')[4]
(S 7°37'57" E 74.03')[1]

(S 8°40' E 64.33')[5]

(S 7°37'57" E 85.00')[1]
(N 8°40' W 85.00')[4]

(S 5°00' E 85.82')[4]
(S 3°57'57" E 85.82')[1]

(S 3°57'57" E 70.19')[1] 70.18'

(S 5°00' E)[4]
(35.09')[4]
35.08'

(S 3°57'57" E 414.00')[1]

(N 5°00' W 99.30')[1]
(S 74°44' W 99.30')[1]
(S 75°46'03" E 99.30')[1]

(S 77°52' W 94.33')[9]
(S 78°54'03" E 94.33')[1] 94.35'

(S 77°52' W 94.73')[9]
(S 77°52' W 94.73')[1]

(S 81°17' E 86.76')[9]
(N 82°19'03" E 86.76')[1] 86.77'

(S 83°08' W 80.87')[7]
(N 83°57'03" E 83.76')[1] 83.77'

(N 83°43'3" E 78.66')[8]
(N 85°45'03" E 78.66')[1] 78.70'

(N 79°57'03" E 78.00')[1] 78.04'
(S 78°55' W 77.96')[9] LOCUS IP

(N 5°00' W)[7]

(12.10')[1,7]
(N 5°00' W)[7]

(39.86')[1,7] 39.88'
(N 6°30' W)[7]
LOCUS IP

(6.27')[7]

22.95'
(22.97')[1,8]
(S 6°30' E)[8]

(5.02')[8]

(11.81')[9]

(12.73')[9]

(13.74')[9]

(37.49')[1] 37.48'
(S 5°00' E 37.49')[9]

(S 3°57'57" E 85.81')[1]

(S 3°57'57" E 70.18')[1]

(S 3°57'57" E 35.10')[1]

(N 5°00' W 92.61')[1]

(S 5°27'57" E 62.83')[1]

(N 8°27'57" W
S 8°27'57" E

(45.21')[1]

(47.40')[1]

(45.92')[1]

(29.00')[1]

(45.00')[1]

(20.13')[1]

102
22.45
FD SPK

4' R/W
98 OR 124

4'

4'

100
22.16
SET MAG

103
21.90
SET MAG

101
21.54
SET MAG

105
21.49
FD SPK

106
12.95
SET MAG/FLAG

104
11.56
SET MAG

108
11.57
SET CHISLD X/TC

107
11.53
FD CITY BM F4-1A

109
11.60
SET CHISLD X/TC

110
11.63
SET CHISLD X/TC

116
12.06
SET CHISLD X/TC

113
10.95
SET MAG

111
12.44
SET CHISLD X/TC

150
11.76
FD CITY OF SANTA CRUZ
STREET MONUMENT ST-12
SEE 86-M-61 & 92-M-18

158
12.60
FD N/T TAG ILL
(N8°40'W 29.00')[2]
(N 7°37'57" W
29.00')[1]

112
13.01
SET MAG

114
12.81
SET MAG/BERM

153
10.70
FD 1IP W/TACK

155
11.61
FD 3/4IP NT

154
12.49
FD 3/4IP LS1225

156
11.46
FD LEAD HOLE

115
11.80
SET MAG

REGISTERED PROFESSIONAL ENGINEER
MITCHEL W. BUSLEY
No. 57874
Exp. 6-30-20
CIVIL
STATE OF CALIFORNIA

DRAWING NAME: K:\2017\176131_Riverfront_Apt_Santa_Cruz\ENG\BASE_FILES\RFTENTMAP3.1.dwg
PLOT DATE: 06-14-19 PLOTTED BY: BUR

BKF 100 YEARS
ENGINEERS . SURVEYORS . PLANNERS
1730 NORTH FIRST ST., SUITE 600
SAN JOSE, CA 95112
(408) 467-9100
www.bkf.com

TENTATIVE MAP / RIVERFRONT PROJECT
412, 418, 428, 440, 504, AND 508 FRONT STREET
LOT LAYOUT PLAN

SANTA CRUZ COUNTY CALIFORNIA

SANTA CRUZ

Revisions	No.

Date 06/13/19
Scale 1" = 20'
Design MWB
Drawn .
Approved .
Job No 20176131

Drawing Number:
C3.1

3 OF 9

© BKF Engineers

GENERAL NOTES

1. CONTRACTOR SHALL REMOVE AND REPAIR ALL DAMAGED CURB, GUTTER, AND SIDEWALK ALONG THE PROPERTY FRONTAGE AND REPLACE IN KIND PER CITY STANDARDS.

CONSTRUCTION KEY NOTES

1. CONSTRUCT DRIVEWAY APPROACH PER CITY OF SANTA CRUZ STANDARDS.
2. INSTALL DETECTABLE WARNING.
3. CONSTRUCT VERTICAL CURB & GUTTER AND SIDEWALK PER CITY OF SANTA CRUZ STANDARDS.
4. CONCRETE AC PAVEMENT CONFORM
5. EDGE STRIPING AT THE 8-FOOT WIDTH MARK OF 12 FOOT WIDE, PAVED LEVEE PATH

LEGEND

- PROPERTY LINE
- VERTICAL CURB AND GUTTER
- RETAINING WALL (SEE STRUCTURAL PLANS)
- AC PAVEMENT
- CONCRETE PAVEMENT

1"= 20'

GRAPHIC SCALE

20 0 20 40

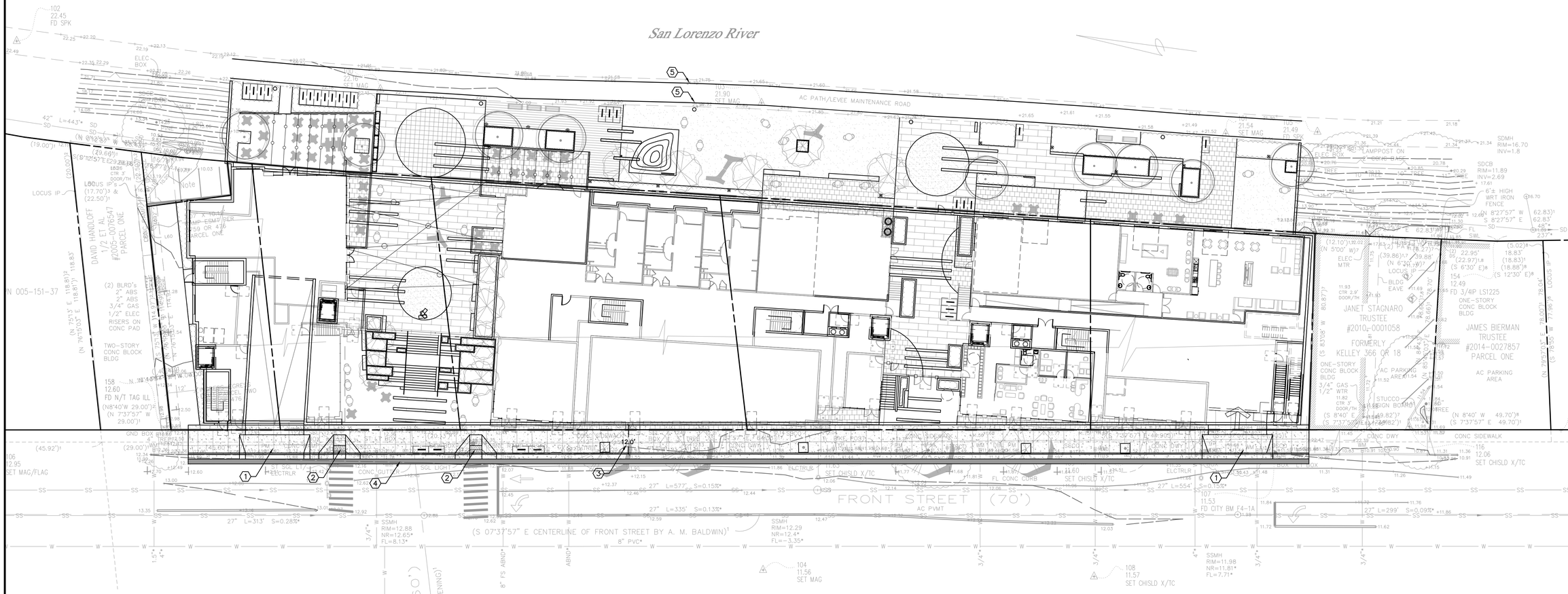

BKF 100+ YEARS
1730 NORTH FIRST ST., SUITE 600
SAN JOSE, CA 95112
(408) 467-9100
www.bkf.com
ENGINEERS . SURVEYORS . PLANNERS

TENTATIVE MAP / RIVERFRONT PROJECT
412, 418, 428, 440, 504, AND 508 FRONT STREET
SITE PLAN

SANTA CRUZ COUNTY, CALIFORNIA

Revisions | No.

Date 06/13/19
Scale 1" = 20'
Design MWB
Drawn .
Approved .
Job No 20176131

REGISTERED PROFESSIONAL ENGINEER MITCHEL W. BURLEY No. 57874 Exp. 6-30-20 CIVIL STATE OF CALIFORNIA

Drawing Number:
C4.1
4 OF 9

DRAWING NAME: K:\2017\176131_Riverfront_Apt_Santa_Cruz\ENG\BASE_FILES\RFTENTMAP.dwg
PLOT DATE: 06-13-19 PLOTTED BY: BUR

© BKF Engineers

1" = 20'

GRAPHIC SCALE

20 0 20 40

GENERAL NOTES

1. FINISHED GRADE AT LANDSCAPED AREAS ADJACENT TO THE BUILDING SHALL BE MINIMUM 8" BELOW FINISH FLOOR.
2. LANDSCAPED FINISHED GRADES AROUND THE PERIMETER OF BUILDING SHOULD BE COMPACTED AND SLOPED AT A 3% MIN. GRADIENT AWAY FROM FOUNDATION.
3. ALL PAVED AREAS ARE TO SLOPE A MINIMUM OF 0.5% AND MAXIMUM OF 8% ACCESSIBLE STALLS AND LOADING ZONES ARE TO SLOPE AT A MAXIMUM OF 2% IN ALL DIRECTIONS. ACCESSIBLE PATHWAYS ARE TO SLOPE AT A MAXIMUM OF 4.9% IN THE DIRECTION OF TRAVEL AND THE SLOPE CROSSWAYS TO THE DIRECTION OF TRAVEL SHALL BE AT A MAXIMUM OF 2%.
4. CONTRACTOR SHALL REMOVE AND REPAIR ALL DAMAGED CURB, GUTTER, AND SIDEWALK ALONG THE PROPERTY FRONTAGE PER CITY DIRECTION AND REPLACE IN KIND PER CITY STANDARDS.

LEGEND

DIRECTION OF FLOW (HARDSCAPE)	
DIRECTION OF FLOW (LANDSCAPE)	
STORM DRAIN JUNCTION BOX	SDJB
STORM DRAIN CLEAN OUT	SDCO
STORM DRAIN AREA DRAIN	AD
STORM DRAIN CATCH BASIN/OVERFLOW DRAIN	CB/OFD
STORM DRAIN INLET	DI
TRENCH DRAIN	
SANITARY SEWER MANHOLE	SSMH
SANITARY SEWER CLEANOUT	SSCO
OVERLAND STORM DRAIN RELEASE	
FF STEP	

LEGEND

PROPERTY LINE	
VERTICAL CURB & GUTTER	
RETAINING WALL	
DIRECTION OF FLOW	
FINISH FLOOR ELEVATION	FF 36.05
TOP OF CURB ELEVATION	TC 36.05
FINISHED GRADE ELEVATION	FG 36.05
FLOW LINE ELEVATION ELEVATION	FL 36.05
TOP OF WALL	TW 36.05
BOTTOM OF WALL/BACK OF WALK	BW 36.05
HIGH POINT	HP
LOW POINT	LP
PAVEMENT ELEVATION	PV 36.05

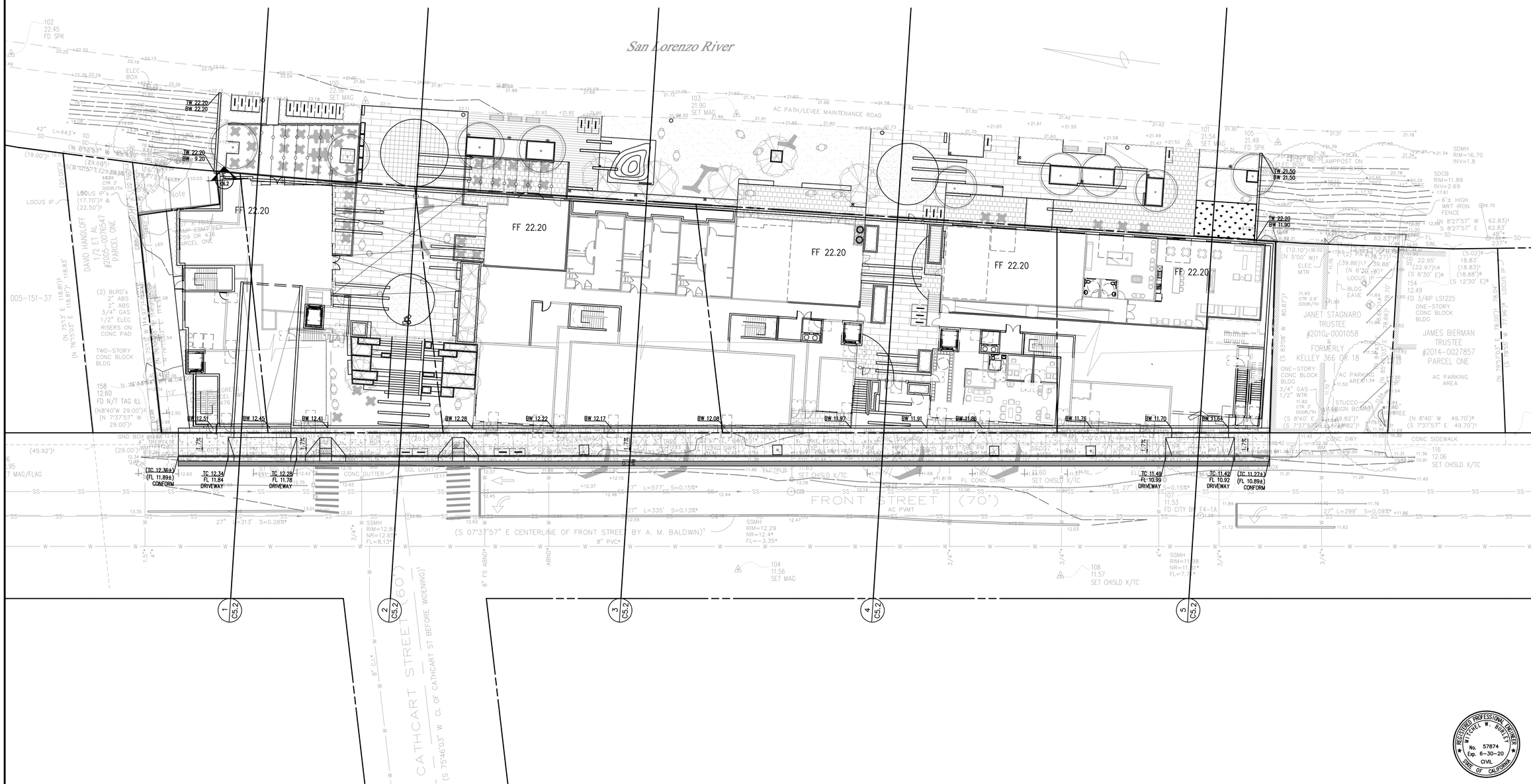

BKF 100+ YEARS
1730 NORTH FIRST ST., SUITE 600
SAN JOSE, CA 95112
(408) 467-9100
www.bkf.com
ENGINEERS . SURVEYORS . PLANNERS

TENTATIVE MAP / RIVERFRONT PROJECT
412, 418, 428, 440, 500, 504, AND 508 FRONT STREET
GRADING PLAN

SANTA CRUZ COUNTY CALIFORNIA

Revisions

No.	

Date 06/13/19
Scale 1" = 20'
Design MWB
Drawn .
Approved .
Job No 20176131

REGISTERED PROFESSIONAL ENGINEER MICHAEL W. BUSLEY No. 57874 Exp. 6-30-20 CIVIL STATE OF CALIFORNIA

Drawing Number:
C5.1
5 OF 9

DRAWING NAME: K:\2017\176131_Riverfront_Apt_Santa_Cruz\ENG\BASE_FILES\RFTENTMAP.dwg
PLOT DATE: 06-13-19 PLOTTED BY: BUR

© BKF Engineers

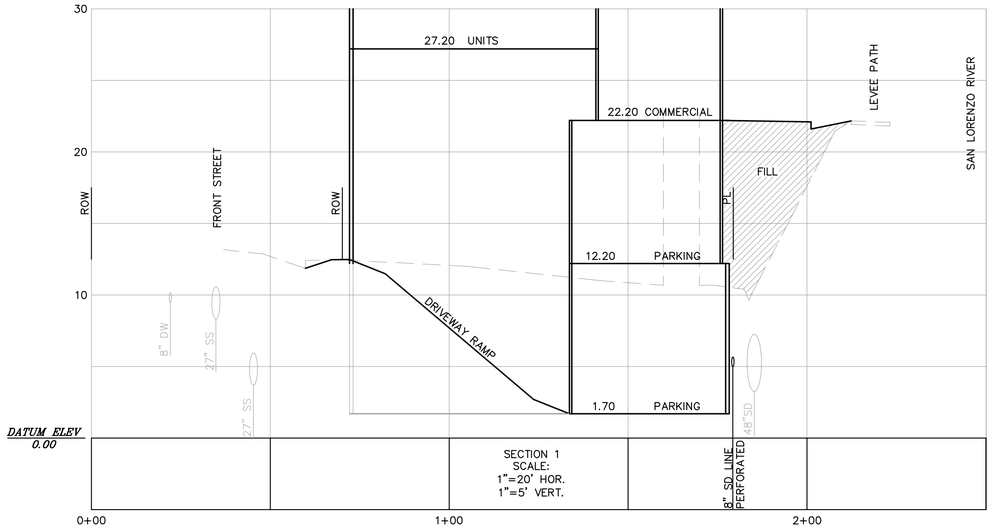

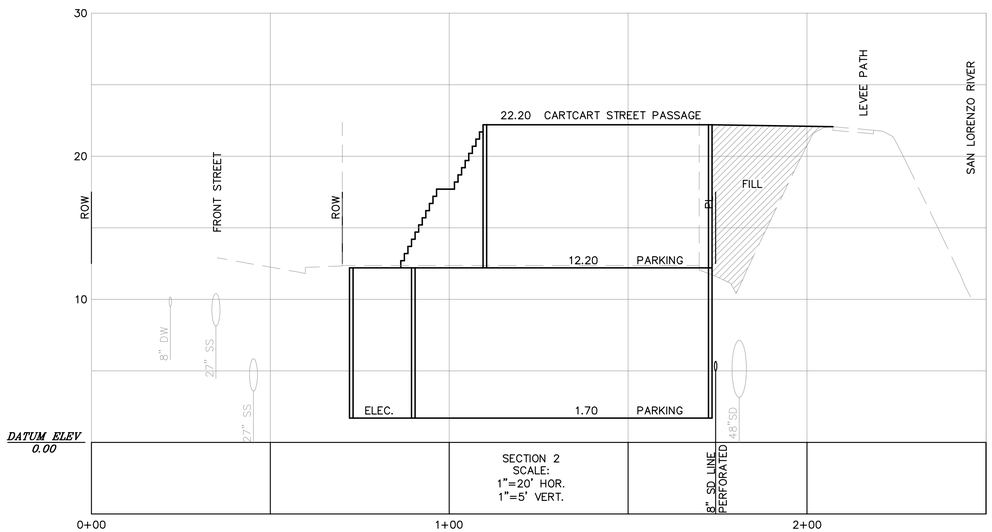

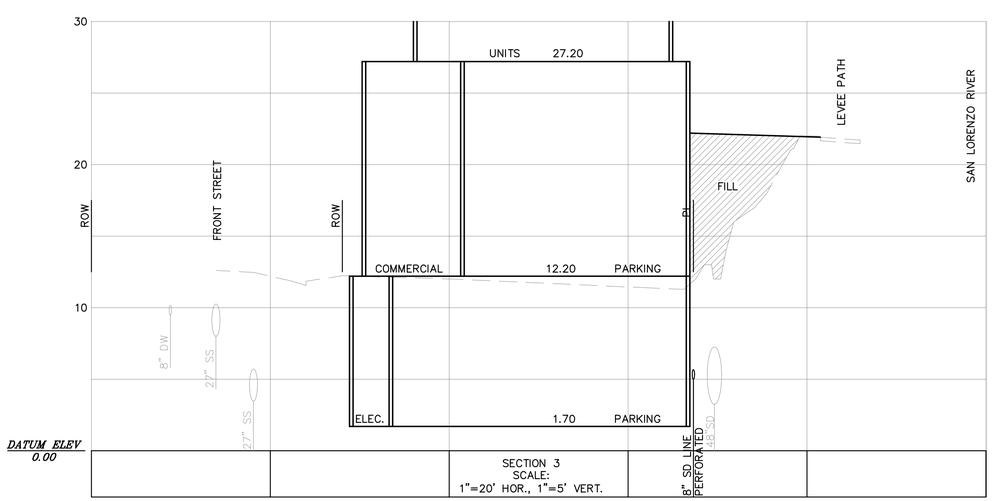

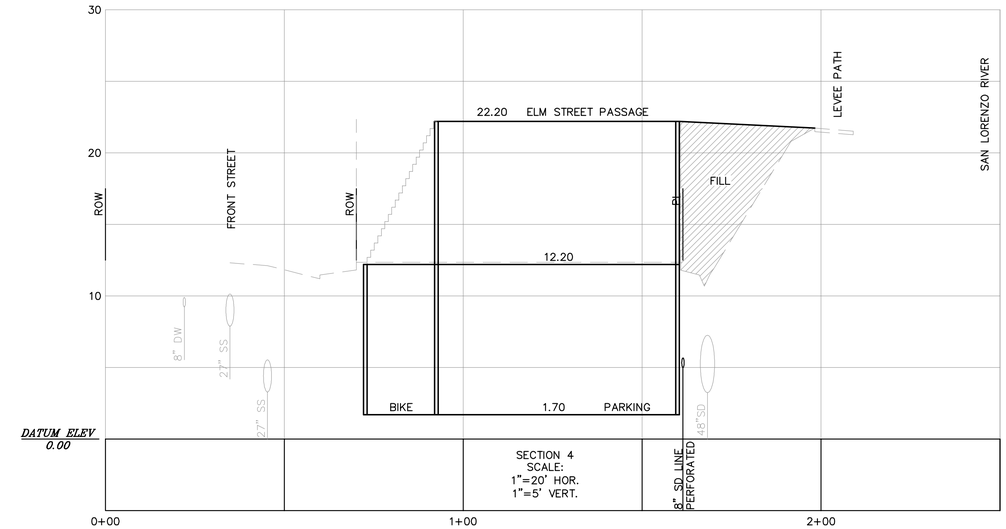

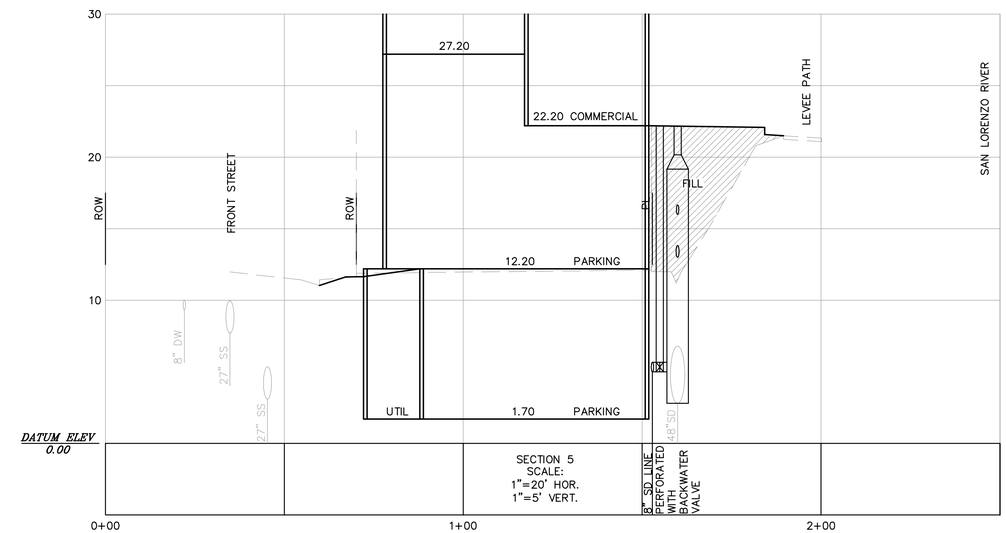

BKF 100+ YEARS
1730 NORTH FIRST ST., SUITE 600
SAN JOSE, CA 95112
(408) 467-9100
www.bkf.com
ENGINEERS . SURVEYORS . PLANNERS

TENTATIVE MAP / RIVERFRONT PROJECT
412, 418, 428, 440, 504, AND 508 FRONT STREET
SITE SECTIONS

SANTA CRUZ COUNTY, CALIFORNIA

SANTA CRUZ

Revisions

No.	

Date 06/13/19
Scale AS SHOWN
Design MWB
Drawn .
Approved .
Job No 20176131

REGISTERED PROFESSIONAL ENGINEER MITCHEL W. BUSLEY No. 57874 Exp. 6-30-20 CIVIL STATE OF CALIFORNIA

Drawing Number:
C5.2
6 OF 9

DRAWING NAME: K:\2017\176131_Riverfront_Apt_Santa_Cruz\ENG\BASE_FILES\RFTENTMAP.dwg
PLOT DATE: 06-13-19 PLOTTED BY: BUR

© BKF Engineers

GENERAL NOTES

1. ALL SEWER PIPES SHALL BE INSTALLED PER SANTA CRUZ STANDARD DETAILS.

CONSTRUCTION KEY NOTES

6. NEW 8" FIRE SERVICE (TO SERVE FIRE SPRINKLERS ONLY) INSTALLATION WITH A SCWD APPROVED DOUBLE-CHECK DETECTOR ASSEMBLY BACKFLOW DEVICE INSTALLATION AS PER SCWD DETAIL 9.
7. NEW 4" DOMESTIC WATER SERVICE INSTALLATION WITH A SCWD APPROVED REDUCED PRESSURE BACKFLOW DEVICE AND WATER METER AS PER SCWD DETAIL 6.
8. INSTALL CHRISTY G05 VALVE BOX AND G05C LID PER SANTA CRUZ WATER SYSTEM STANDARD SPECIFICATIONS.

CONSTRUCTION KEY NOTES

1. INSTALL 12"x12" STORM DRAIN JUNCTION BOX PER DETAIL 7, SHEET C7.2.
2. INSTALL STORM DRAIN TREATMENT MANHOLE PER DETAIL 7, SHEET C7.2.
3. INSTALL SANITARY SEWER CLEANOUT & LATERAL PER SANTA CRUZ STANDARD DETAILS. SEE PLUMBING PLANS FOR CONTINUATION INTO THE BUILDING.
4. INSTALL AREA DRAIN.
5. INSTALL SANITARY SEWER MANHOLE PER SANTA CRUZ STANDARD DETAILS.

LEGEND

FIRE HYDRANT/FIRE DEPT. CONNECTION	FH/FDC
REDUCED PRESSURE BACKFLOW DEVICE	
DOUBLE-CHECK DETECTOR ASSEMBLY	
WATER VALVE	WV
CHECK VALVE	CV
WATER METER	WM

LEGEND

PROPERTY LINE	
CURB AND GUTTER	
SANITARY LINE	10" SDR 26 PVC SS
OVERFLOW STORM DRAIN LINE (TREATED)	12" HDPE
STORM DRAIN LINE (UNTREATED)	6"/8" HDPE SD
TRENCH DRAIN	
WATER LINE	8" W
GAS LINE	G
JOINT TRENCH	JT
AREA DRAIN	AD
SANITARY SEWER MANHOLE	SSMH
SANITARY SEWER CLEANOUT	SSCO
STORM DRAIN MANHOLE	SDMH
STORM DRAIN CLEAN OUT	SDCO
STORM DRAIN CATCH BASIN/DRAIN INLET	CB/DI
STORM DRAIN JUNCTION BOX	SDJB

1"= 20'

GRAPHIC SCALE

20 0 20 40

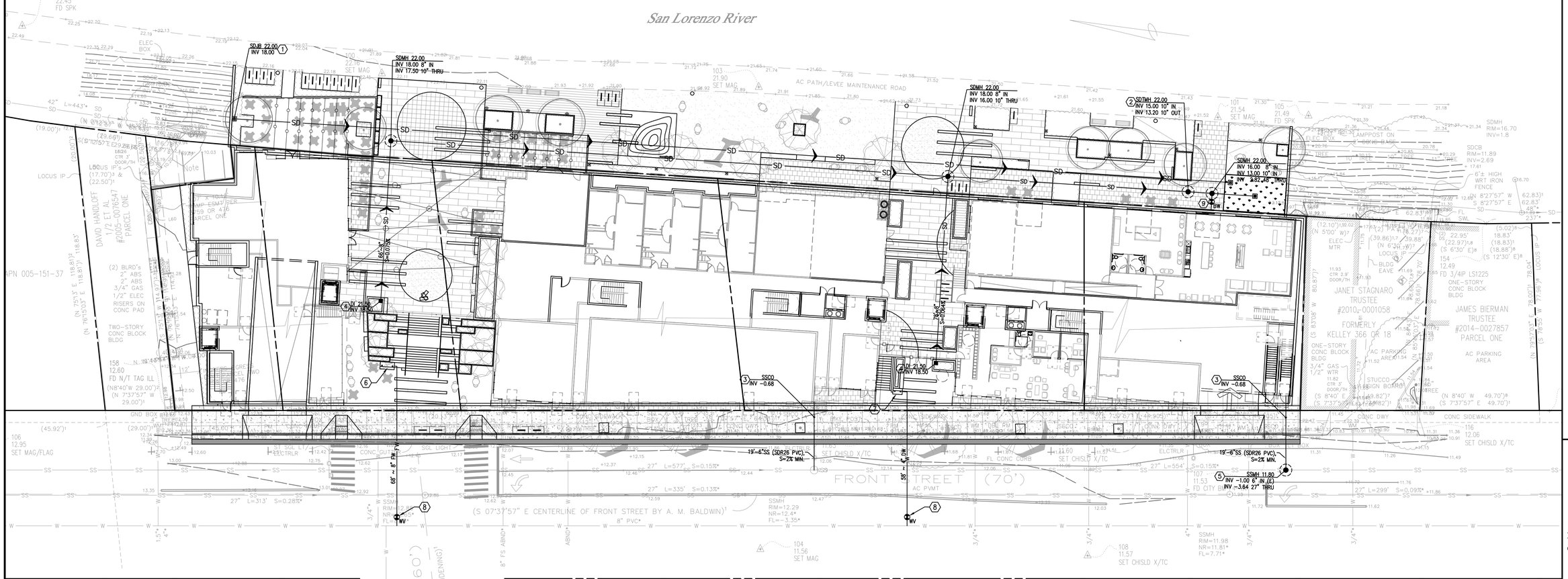

1730 NORTH FIRST ST., SUITE 600
SAN JOSE, CA 95112
(408) 467-9100
www.bkf.com
BKF 100+ YEARS
ENGINEERS . SURVEYORS . PLANNERS

TENTATIVE MAP / RIVERFRONT PROJECT
412, 418, 428, 440, 504, AND 508 FRONT STREET
UTILITY PLAN

SANTA CRUZ COUNTY, CALIFORNIA

SANTA CRUZ

Revisions

No.	

Date 06/13/19
Scale 1" = 20'
Design MWB
Drawn .
Approved .
Job No 20176131

REGISTERED PROFESSIONAL ENGINEER MITCHEL W. BUSLEY No. 57874 Exp. 6-30-20 CIVIL STATE OF CALIFORNIA

Drawing Number:
C6.1
7 OF 9

DRAWING NAME: K:\2017\176131_Riverfront_Apt_Santa_Cruz\ENG\BASE_FILES\RFTENTMAP.dwg
PLOT DATE: 06-13-19 PLOTTED BY: BUR

© BKF Engineers

TABLE 1

TREATMENT CONTROL MEASURE SUMMARY TABLE

DRAINAGE AREAS	DRAINAGE AREA SIZE (SQ. FT.)	PERVIOUS SURFACE (SQ. FT.)	TYPE OF PERVIOUS SURFACE	IMPERVIOUS SURFACE (SQ. FT.)	TYPE OF IMPERVIOUS SURFACE	WATER QUANTITY (FLOW AND/OR VOLUME GENERATED)		PROPOSED TREATMENT CONTROLS	CONFORMS TO SIZE STANDARD?
						REQUIRED	PROVIDED		
A–1	15,493	7,427	LANDSCAPE	8,066	CONCRETE	352 SF	383 SF	SCM–1 BIORETENTION BASIN 1	YES
A–2	42,684	0	N/A	42,684	ROOF CONCRETE	0.18 CFS	0.21 CFS	SCM–2 PERK FILTER MANHOLE 1	YES

TABLE 2

TIER 3 SIMPLE METHOD CALC		
i	0.521	=total imperv (8066 sf)/total lot size (15493 sf)
C	0.353	=(0.858*I^3)-(0.78*I^2)+(0.774*I)+0.04
Rainfall depth, d (ft)	0.167	=2"/12 Santa Cruz 95TH percentile - WMZ 1,4 & 10
Tributary Area, A (sf)	6945	=New imperv (6202 sf)+ 0*Replaced imperv (1864 sf) + 0.1*new pervious (7427 sf)
Retention Volume (cf)	**408**	=C*d*A
Retention Volume - void ratio included (cf)	**1020**	=Volume/0.4
Area of Basin Required (sf)	**352**	= 4% (total imperv+ 0.1*total perv)
Area of Basin Provided (sf)	**383**	≥ Area of basin required
Depth of Rock (ft)	**2.7**	=Retention volume/Area of basin provided

NOTES:

1. CALCULATIONS WERE DONE PER CHAPTER 6B OF THE BEST MANAGEMENT PRACTICES MANUAL FOR THE CITY'S STORM WATER MANAGEMENT PROGRAM.
2. THE PROJECT RUNOFF DISCHARGES INTO 48" CITY STORM DRAIN LINE, AND OUTFALLS DIRECTLY INTO THE SAN LORENZO RIVER, THEREFORE THIS PROJECT IS NOT SUBJECT TO TIER 4 REQUIREMENTS: PEAK MANAGEMENT.
3. MAINTENANCE ACCESS TO SCM–1 AND SCM–2 SHALL BE AVAILABLE FROM SAN LORENZO RIVER LEVEE TRAIL DRIVEWAY AT SOQUEL AVENUE.

LEGEND

- PROJECT PROPERTY LINE
- RETAINING WALL
- DRAINAGE RELEASE PATH
- CATCH BASIN
- AREA DRAIN
- DRAINAGE MANAGEMENT AREA BOUNDARY — A-X
- STORMWATER CONTROL MEASURE — SCM-#
- STORM DRAIN LINE (UNTREATED) — SD
- TRENCH DRAIN

1"= 20'

GRAPHIC SCALE

20 0 20 40

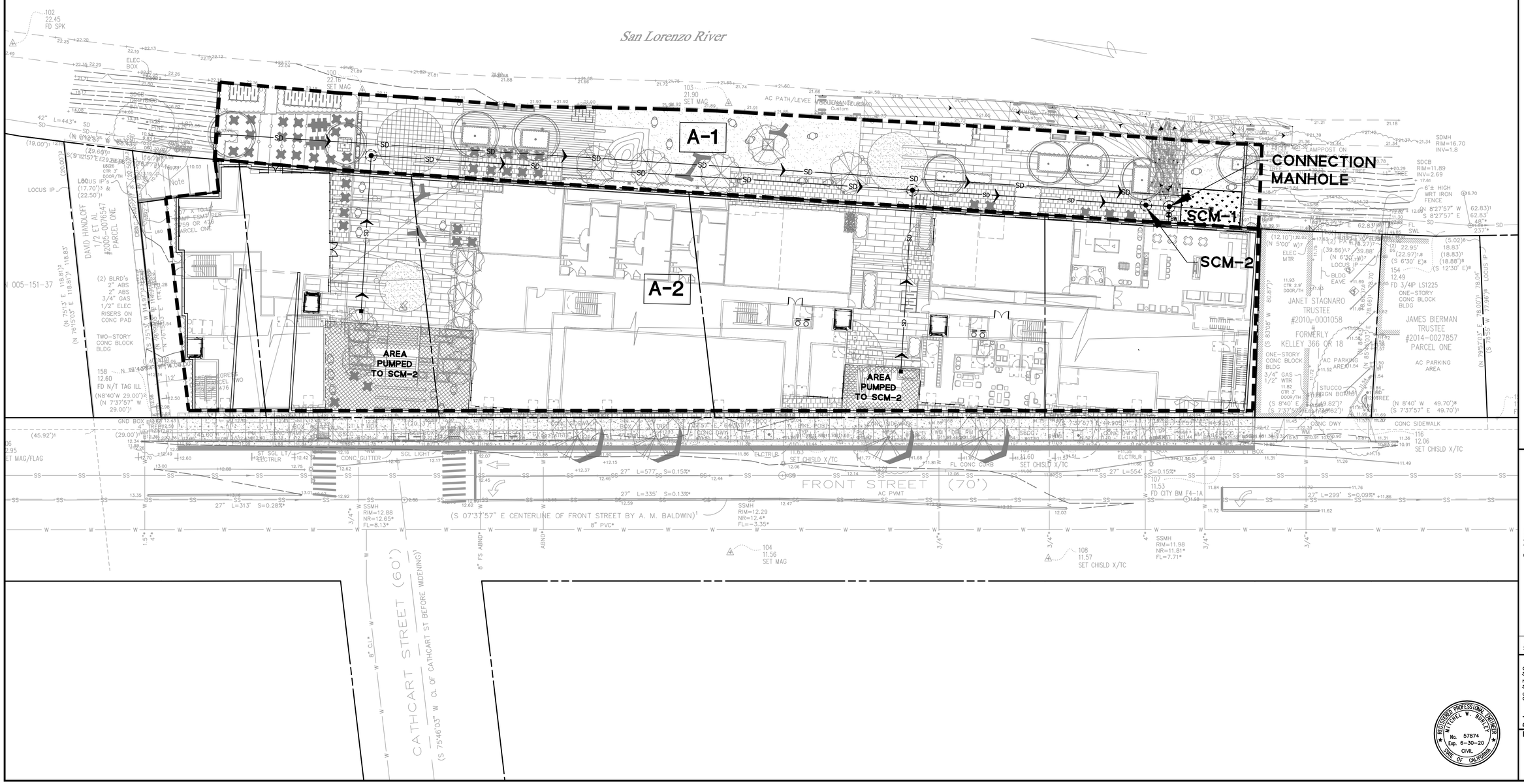

BKF 100+ YEARS
1730 NORTH FIRST ST., SUITE 600
SAN JOSE, CA 95112
(408) 467-9100
www.bkf.com
ENGINEERS . SURVEYORS . PLANNERS

TENTATIVE MAP / RIVERFRONT PROJECT
412, 418, 428, 440, 504, AND 508 FRONT STREET
STORMWATER CONTROL PLAN

SANTA CRUZ COUNTY CALIFORNIA

SANTA CRUZ

Revisions

No.	

Date 06/13/19
Scale 1" = 20'
Design MWB
Drawn .
Approved .
Job No 20176131

Drawing Number:
C7.1
8 OF 9

REGISTERED PROFESSIONAL ENGINEER MITCHEL W. BAILEY No. 57874 Exp. 6-30-20 CIVIL STATE OF CALIFORNIA

DRAWING NAME: K:\2017\176131_Riverfront_Apt_Santa_Cruz\ENG\BASE_FILES\RFTENTMAP.dwg
PLOT DATE: 06-13-19 PLOTTED BY: BUR

© BKF Engineers

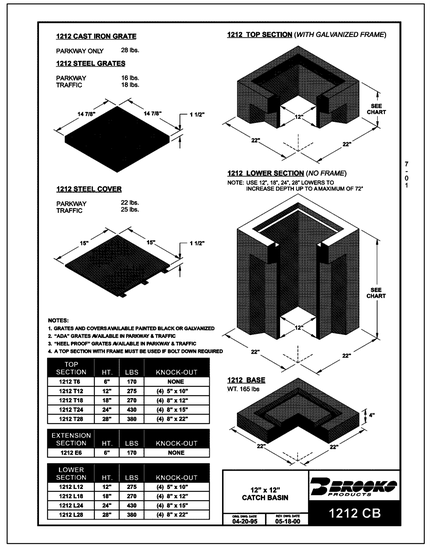

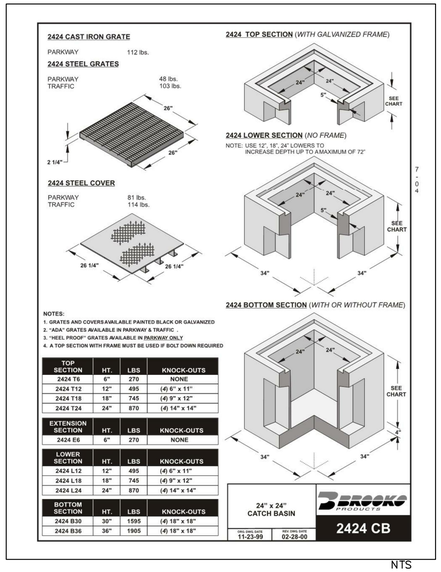

NTS

1 CATCH BASIN/ DROP INLET/ JUNCTION BOX DETAIL

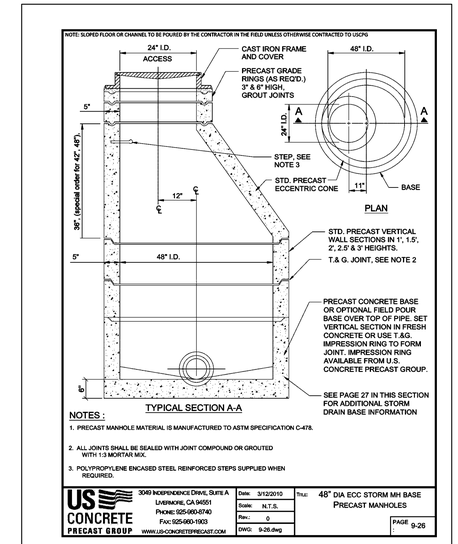

NTS

2 STORM DRAIN MANHOLE

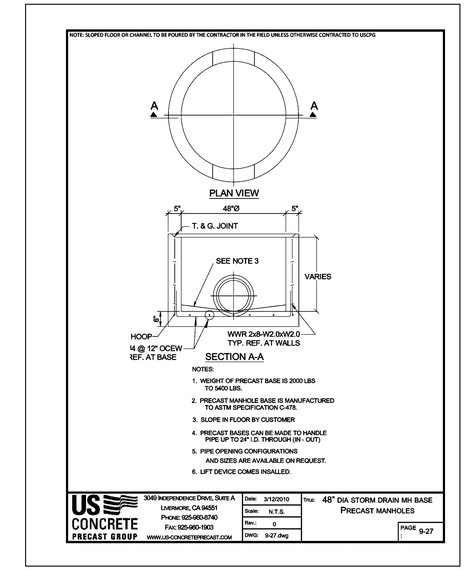

NTS

3 SDMH BASE

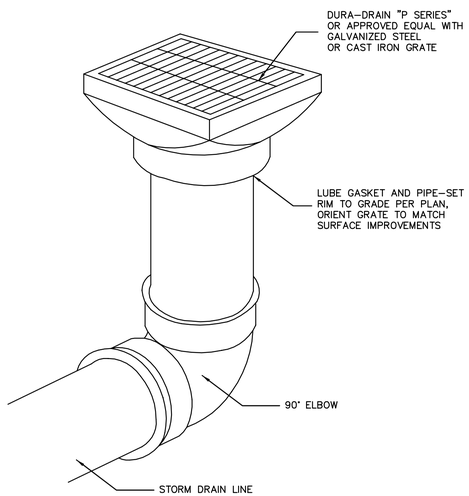

NTS

4 LANDSCAPE AREA DRAIN

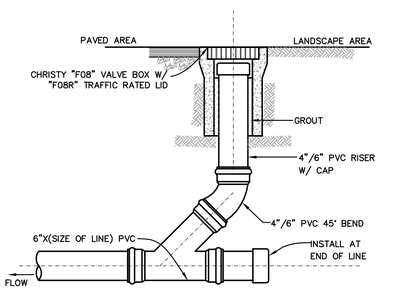

NTS

5 STORM DRAIN/SANITARY SEWER CLEANOUT

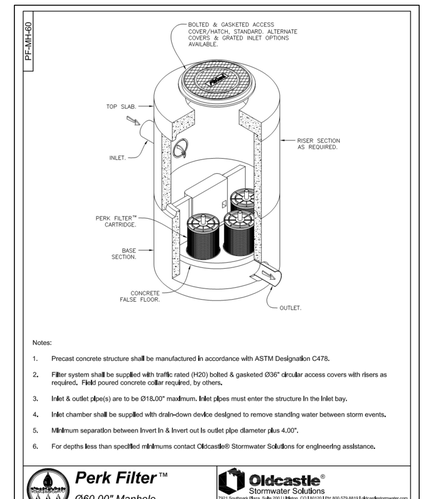

NTS

6 SD TREATMENT MANHOLE

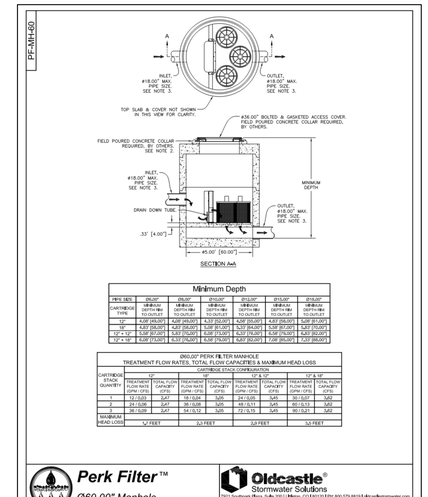

NTS

3 SDMH BASE

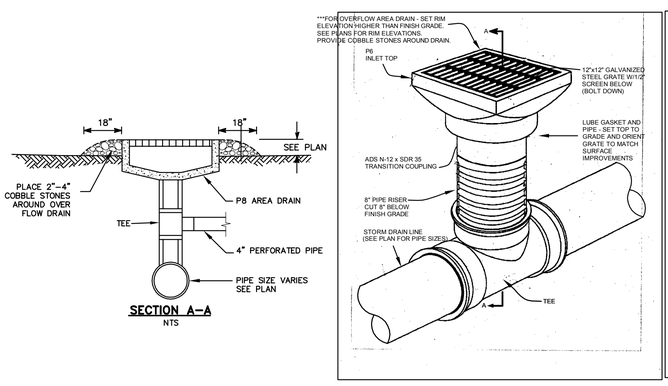

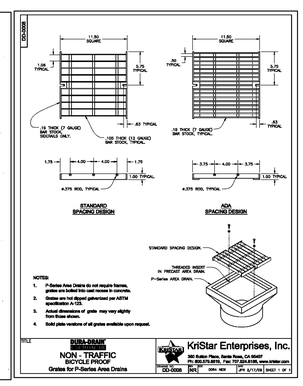

7 OVERFLOW DRAIN

NOTES

1. TREATMENT SOIL MIX SHALL MEET REQUIREMENTS AS SPECIFIED IN CHAPTER 6B OF THE BEST MANAGEMENT PRACTICES MANUAL FOR THE CITY OF SANTA CRUZ.
2. THE BIOTREATMENT SOIL MIX USED IN ALL BIORETENTION AREAS SHALL COMPLY WITH THE SPECIFICATIONS IN ATTACHMENT L OF THE RWQCB MUNICIPAL REGIONAL PERMIT. IF THE BIOTREATMENT SOIL MIX SUPPLIER IS INCLUDED ON SCVURPPP'S "BIOTREATMENT SOIL MIX SUPPLIER LIST" (SUPPLIER LIST), A BIOTREATMENT SOIL MIX SUPPLIER CERTIFICATION STATEMENT (CERTIFICATION STATEMENT) SHALL BE COMPLETED BY THE SUPPLIER AND SUBMITTED TO THE CITY/PROJECT ENGINEER A MINIMUM OF 14 DAYS PRIOR TO DELIVERY OF THE MATERIAL TO THE JOB SITE. IF THE BIOTREATMENT SOIL MIX SUPPLIER IS NOT INCLUDED ON THE SUPPLIER LIST, A BIOTREATMENT SOILS MIX VERIFICATION CHECKLIST (VERIFICATION CHECKLIST) SHALL BE COMPLETED BY THE SUPPLIER AND SUBMITTED TO THE CITY/PROJECT ENGINEER A MINIMUM OF 14 DAYS PRIOR TO DELIVERY OF THE MATERIAL TO THE JOB SITE. COPIES OF THE SUPPLIER LIST, CERTIFICATION STATEMENT AND VERIFICATION CHECKLIST CAN BE DOWNLOADED FROM THE COUNTYWIDE PROGRAM'S WEBSITE AT HTTP://WWW.SCVURPPP-W2K.COM/ND_WP.SHTML
3. PERFORATED PIPE SHALL BE SOLVENT WELD PVC SDR 35 (OR APPROVED EQUAL) WITH PERFORATIONS FACED DOWN. LOCATION OF THE PIPE VARIES, SEE PLAN.
4. FOR ANY LINER PENETRATIONS, RADIAL-CUT THE LINER FOR PIPE. MASTIC AND SEAL WITH PIPE CLAMP TO INSURE WATER-TIGHT SEAL.
5. MAINTAIN SPECIFIED DEPTH BENEATH PERFORATED PIPE.

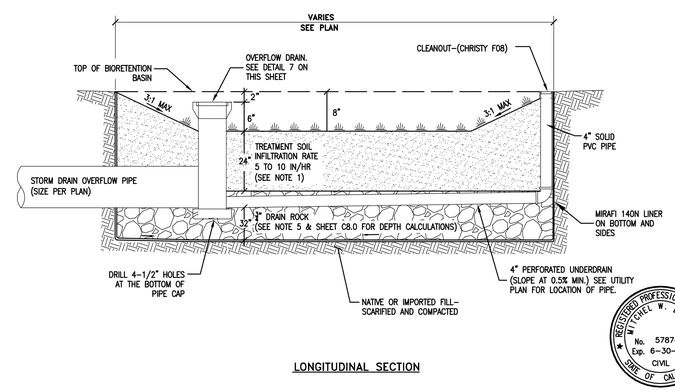

8 BIORETENTION BASIN DETAIL

BKF 100 YEARS
1730 NORTH FIRST ST., SUITE 600
SAN JOSE, CA 95112
(408) 467-9100
www.bkf.com
ENGINEERS . SURVEYORS . PLANNERS

TENTATIVE MAP / RIVERFRONT PROJECT
412, 418, 428, 440, 504, AND 508 FRONT STREET
CIVIL DETAILS
SANTA CRUZ COUNTY, CALIFORNIA

SANTA CRUZ

Revisions | No.

Date 06/13/19
Scale AS SHOWN
Design MWB
Drawn .
Approved .
Job No 20176131

Drawing Number:
C9.1

9 OF 9

DRAWING NAME: K:\2017\176131_Riverfront_Apt_Santa_Cruz\ENG\BASE_FILES\RFTENTMAP.dwg
PLOT DATE: 06-13-19 PLOTTED BY: BUR

ATTACHMENT E

DATE: August 29, 2020

AGENDA OF: September 3, 2020

DEPARTMENT: Planning & Community Development

SUBJECT: ATTACHMENT E – HPC Staff Report of August 5, 2020

Visit HPC Agenda for August 5, 2020 to review associated staff report, attachments, and public correspondence.

Attachment 1

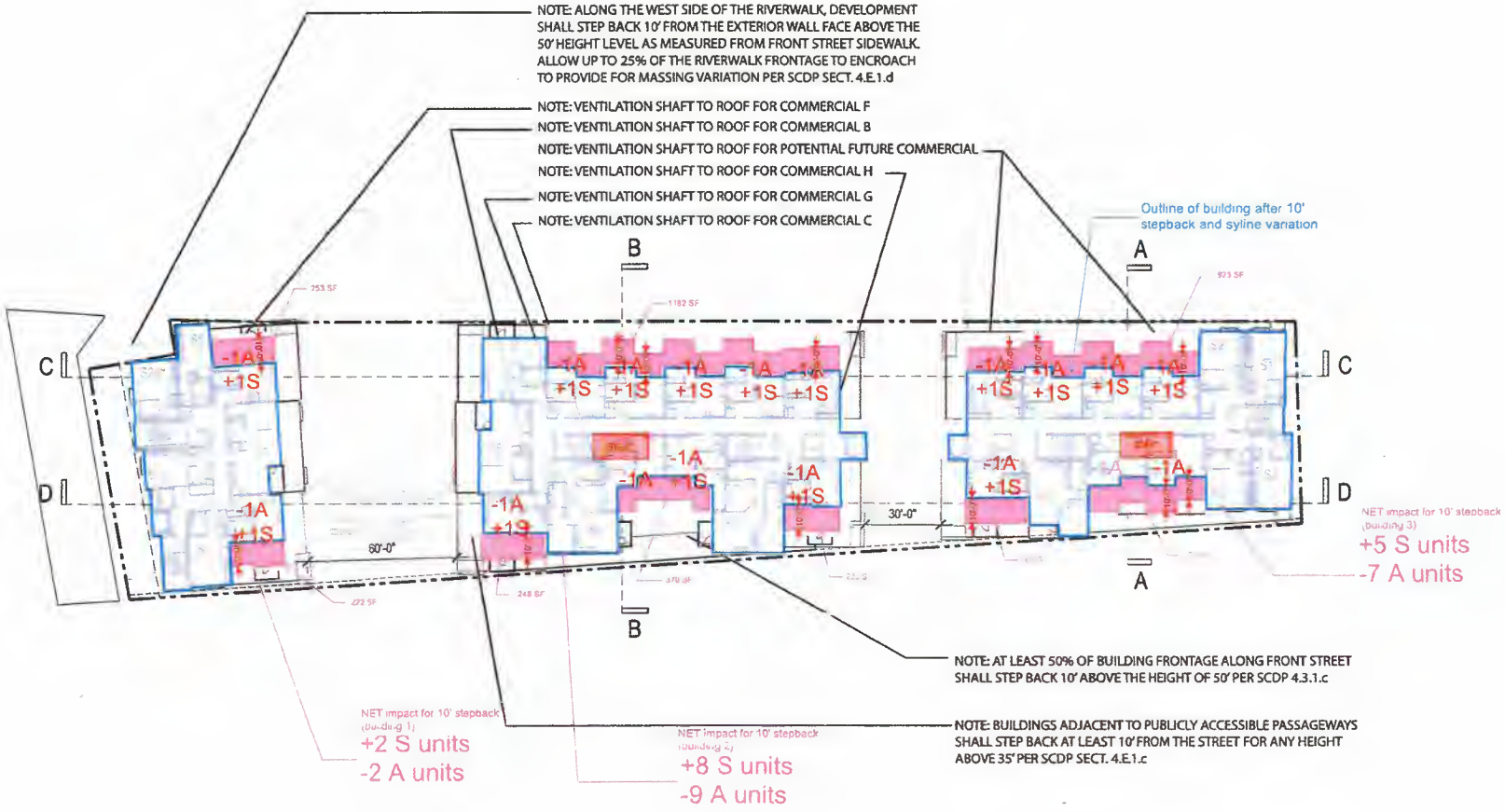

NOT TO SCALE @ 11x17
SCALE: 1" = 20' @ 24x36

N 0' 20' 40' 60'

12

RIVERFRONT PROJECT
SANTA CRUZ, CA
HPA #16319

LEVEL 5 PLAN
10/18/19

SC RIVERFRONT

HUMPHREYS & PARTNERS ARCHITECTS, L.P.
5339 Alpha Rd. Suite 300, Dallas, TX 75240 | 972.701.9636 | www.humphreys.com

© 2019 by Humphreys & Partners Architects, L.P. The arrangements devoted herein are the sole property of Humphreys & Partners Architects, LP and may not be reproduced in any form without its written permission. Architectural conceptual site plans are for feasibility purpose only. Revisions may occur due to further investigation from regulatory authorities and building code analysis. Dimensions shown are of a strategic intent only. Refer to surveys and civil drawings for technical information and measurements.

Attachment 2

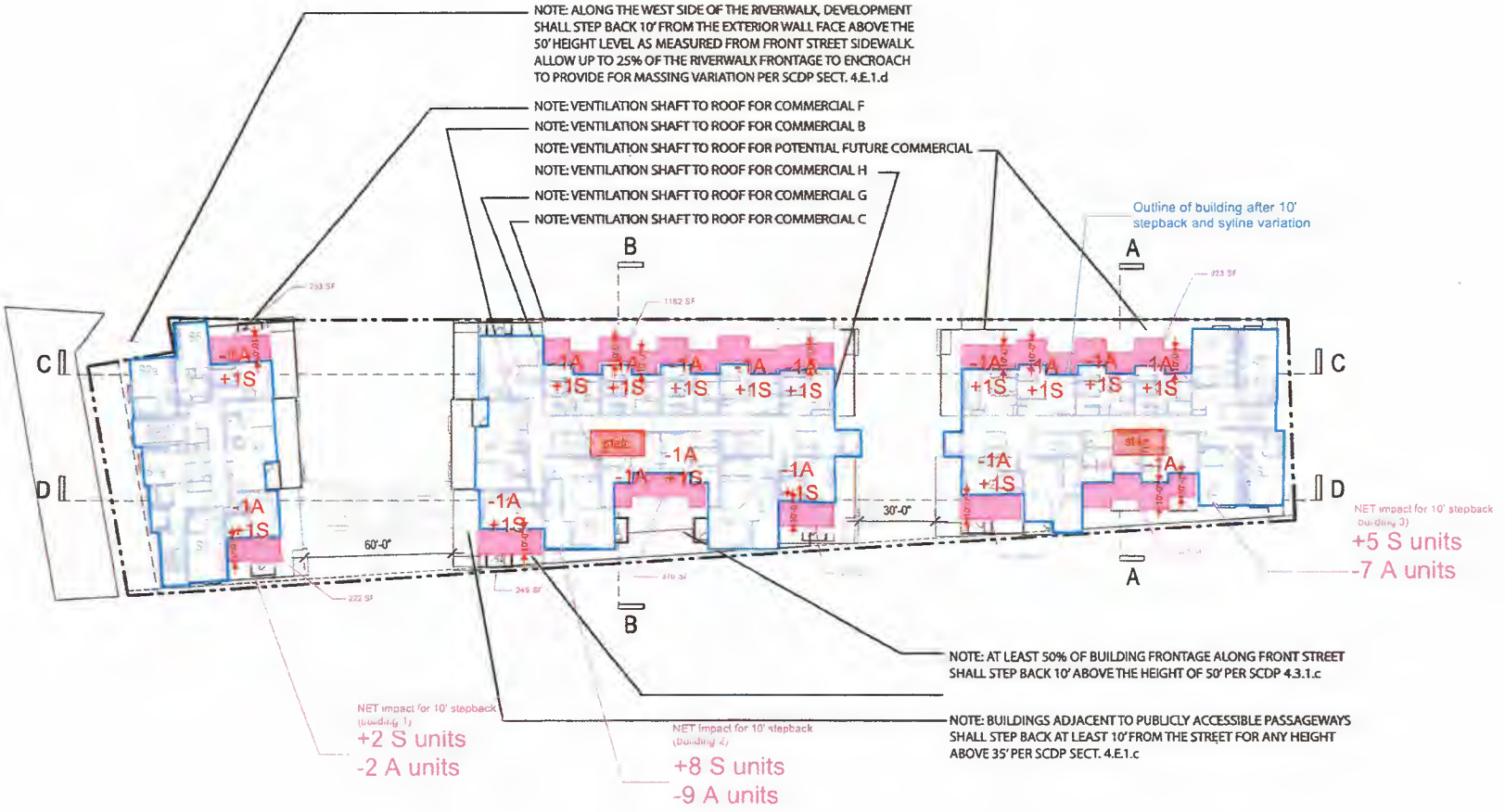

NOT TO SCALE @ 11x17
SCALE: 1" = 20' @ 24x36

13

RIVERFRONT PROJECT
SANTA CRUZ, CA
HPA #16319

LEVEL 6 PLAN
10/18/19

SC RIVERFRONT

HUMPHREYS & PARTNERS ARCHITECTS, L.P.
5339 Alpha Rd., Suite 300, Dallas, TX 75240 | 972.701.9636 | www.humphreys.com

© 2019 by Humphreys & Partners Architects, L.P. The arrangements depicted herein are the sole property of Humphreys & Partners Architects, LP and may not be reproduced in any form without its written permission. Architectural conceptual site plans are for feasibility purpose only. Revisions may occur due to further investigation from regulatory authorities and building code analysis. Dimensions shown are of a strategic intent only. Refer to surveys and civil drawings for technical information and measurements.

Attachment 3

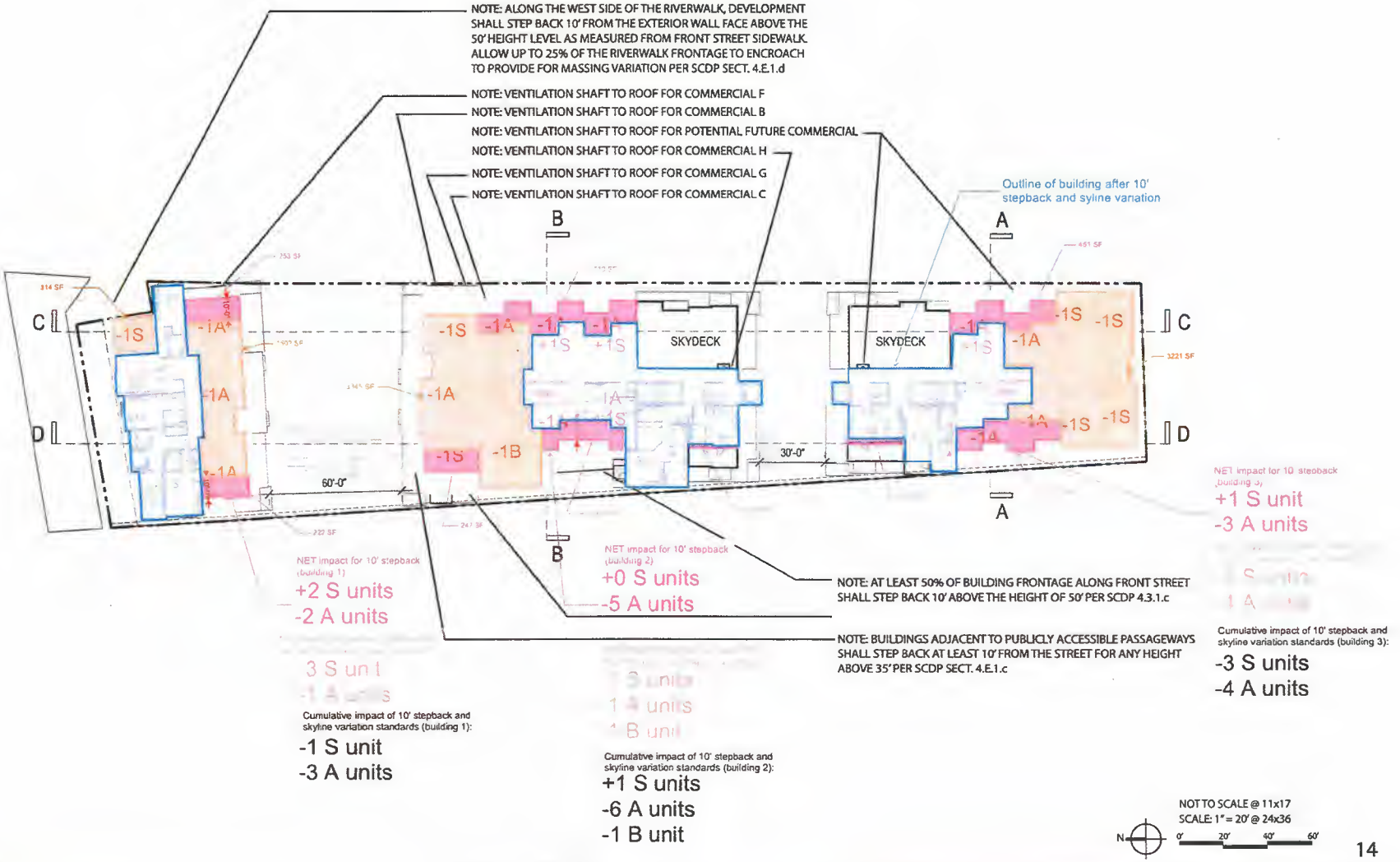

RIVERFRONT PROJECT
SANTA CRUZ, CA
HPA #16319

LEVEL 7 PLAN
10/18/19

SC RIVERFRONT

HUMPHREYS & PARTNERS ARCHITECTS, L.P.
5339 Alpha Rd., Suite 300, Dallas, TX 75240 | 972.701.9638 | www.humphreys.com

© 2019 by Humphreys & Partners Architects, L.P. The arrangements depicted herein are the sole property of Humphreys & Partners Architects, LP and may not be reproduced in any form without its written permission. Architectural conceptual site plans are for feasibility purpose only. Revisions may occur due to further investigation from regulatory authorities and building code analysis. Dimensions shown are of a strategic intent only. Refer to surveys and civil drawings for technical information and measurements.

C

PLANNING COMMISSION AGENDA REPORT

DATE: August 27, 2020

AGENDA OF: September 3, 2020

SUBJECT: **A19-0006 – General Plan Zoning Ordinance Reconciliation** **Citywide**

Informational item referred by the City Council.

This item was referred to the City's Planning Commission by the City Council on August 25, 2020. The original item considered by the City Council is the approval of a contract with Urban Planning Partners, Inc. and their team, to conduct a scope of work that will result in objective development standards for multi-family and mixed use housing.

The City is limited by the Housing Accountability Act of 2019 to applying objective standards to proposals for multi-family housing applications, and further limited to applying only those standards which do not hinder a development proposal from achieving the maximum allowable number of housing units on a piece of property. The City currently employs only a few objective standards on these projects (height, number of stories, setbacks, minimum lot size, and in some cases a floor area ratio) and relies on subjective standards and design review permits to regulate the placement, bulk, and architectural features of multi-family and commercial projects including mixed use projects.

The City received a grant from the State Housing and Community Development Department (HCD) to fund the creation of objective development standards to add to our zoning code to help regulate these housing projects. These funds will finance the consultant services described in the contract, as well as some of the City Staff time on the project.

The City Council has referred this item to the Planning Commission as an informational item, to ensure that the Commission is aware of the project and prepared for their important advisory role in the coming months. The City Council voted to approve this item on the following motion:

Motion carried to:

- *Direct the City Manager to execute the contract, in a form approved by the City Attorney, with Urban Planning Partners in the amount of $179,935 to procure consultant services to create Objective Development Standards for Mixed-Use and Multifamily Housing.*
- *Authorize the City Manager to approve change orders not to exceed $23,300 for the optional parking tasks called out in the scope of work.*
- *Direct staff to:*
    - *Invite the Planning Commission to significant outreach events and incorporate regular updates to the Planning Commission into the project schedule.*
    - *Invite Planning Commission input as the project progresses.*

- *Invite Planning Commissioners to attend public meetings in their official capacity as members of the Planning Commission, with publically noticed quorum, including Brown Act notification, so Planning Commissioners can attend.*
- *Direct staff to send the approved documents to the Planning Commission to be reviewed at their first meeting in September.*

Submitted by:

Sarah Neuse
Senior Planner

Matthew VanHua
Principal Planner

Approved by:

Lee Butler
Planning Director

Attachments:

1. August 25, 2020 City Council Item #20

City Council
AGENDA REPORT

DATE: August 13, 2020

AGENDA OF: August 25, 2020

DEPARTMENT: Planning & Community Development

SUBJECT: Update on General Plan and Zoning Ordinance Reconciliation Effort and Approval of a Contract with Urban Planning Partners for Consultant Services on the Objective Standards Senate Bill 2 Grant (PL)

RECOMMENDATION: 1) Direct the City Manager to execute the contract, in a form approved by the City Attorney, with Urban Planning Partners in the amount of $179,935 to procure consultant services to create Objective Development Standards for Mixed-Use and Multifamily Housing; 2) Authorize the City Manager to approve change orders not to exceed $23,300 for the optional parking tasks called out in the scope of work. and 3) Direct Staff to invite the Planning Commission to significant outreach events and incorporate regular updates to the Planning Commission into the project schedule.

BACKGROUND: The City is currently operating with a zoning ordinance that does not fully implement the land use pattern envisioned by its General Plan. The 2030 General Plan created three new Mixed-Use land use designations when it was adopted in 2012. The process to adopt zoning ordinance language that implements these new designations was paused in mid-2017 amid community concern and was officially terminated by the City Council in August of 2019.

Objective Standards Required by Housing Accountability Act of 2019
Developing objective standards for multi-family and mixed use housing is a priority for the City now due to the State of California Housing Accountability Act of 2019 (HAA). The HAA requires the City to allow development at the capacities contained in the adopted General Plan and existing zoning ordinance for all sites that permit housing development. Where the General Plan standards allow for more housing than the zoning ordinance, the capacity allowed by the General Plan must be permitted. Further, any of the existing objective standards that prevent a housing project from achieving the maximum allowed number of dwelling units cannot be applied.

The City currently relies on the design review process to guide most mixed-use housing and multi-family development proposals. The General Plan and zoning ordinance have only a limited number of objective standards that can be used to regulate the design of these sites. This is not the case in downtown or other select areas because the Downtown Plan, Mission Street Urban Design Plan, and Ocean Street Area Plan have a greater number of objective standards.

The City applied for and received an SB2 grant from the State of California Department of Housing and Community Development to support the creation of a set of objective, measurable development standards that will apply to mixed-use and multi-family housing within the City.

The standards will make housing development more predictable and streamlined, which in turn could encourage the needed development of more housing. This project provides a process for developing objective design standards for consideration by the City Council.

Consultant Procurement Process
The City released a Request for Proposals in May 2020 (Attachment 2) and received four proposals from highly qualified firms on June 19th. After reviewing and scoring these proposals, City staff has selected a preferred vendor for these services. Staff recommends that the City Council direct the City Manager to execute the contract with Urban Planning Partners (Attachment 1). The attached contract contains the full project scope, schedule, and fee proposed for this project.

DISCUSSION

Proposal and Consultant Team

Social Equity Focus
Staff was looking for proposals that were technically sound, included a highly-qualified team, and which included a creative approach to the broad outreach effort desired by staff and the City Council. Each team provided the necessary technical skills in urban design, planning, and economic analysis. The proposal from Urban Planning Partners (UPP) stood out for its strong focus on ensuring participation by City residents that have not previously been as involved with City government (including Spanish-speaking populations and households that may not have internet access). UPP provided an explicit social justice and anti-racist lens on the issue of housing availability and the history of exclusive zoning. This perspective is crucial in understanding the effects of our land use choices and how the current patterns and forms in our city create the challenges currently faced by many in the community. This thoughtful community engagement approach is detailed in Task 2 of the Scope.

Development Feasibility Analysis
It is important for the consultant to review current development standards and ensure the new objective standards not only meet the design goals of the City but also are feasible for housing developers. The proposed scope includes a task to analyze the existing development regulations and anticipated development capacity of the land use designations created for Mixed-Use housing in the 2030 General Plan. The current Mixed-Use High Density (MXHD) designation has especially been at the center of most of the concerns the City has heard from residents. As discussed in the City Council report of January 28, 2020, Planning staff found that only one of the 91 parcels carrying this designation has submitted a formal entitlement to redevelop and the approved project includes significantly fewer housing units than are permitted under the 2030 General Plan. The consulting team will identify the building sizes currently allowed and then work with local developers, architects, and the community to provide the City with an assessment of the likelihood that needed housing will be built on these MXHD properties. This assessment will be a key factor in deciding whether to initiate a project to amend the 2030 General Plan and change the currently adopted land use pattern by moving some number of potential housing units from the Water Street and Soquel Avenue neighborhood to other locations in the City. This work will be conducted in the late fall of this year, as part of Task 3.

Consultant Team
The consultant team is headed by Urban Planning Partners (UPP), with sub-consultants Strategic Economics for economic analysis and InterEthnica for community outreach. The qualifications for each firm are listed below, taken from their proposal response:

Urban Planning Partners: Urban Design, Planning, and Project Coordination
Urban Planning Partners is a policy and environmental planning firm that was established in 2009. The firm is located in Downtown Oakland and is 100-percent woman-owned. Our mission is to help create better places in partnership with our clients and communities where we work. Our core values are:

- **We care.** We have called the Bay Area home since our founding and love playing a part in shaping some of our favorite places. We take on projects that stir something in us, and it shows.
- **We collaborate.** Projects are stronger when the development process is collaborative. Whether it's working with one another, our sub-consultants, the community, or our clients, we believe in joining forces.
- **We reach.** The potential for what we can do, not relying on what we've always done, is what motivates us. Reaching up and reaching out keeps our work innovative, our team engaged, and our approach inclusive.
- **We are real.** We pride ourselves on telling it like it is. Our clients can count on us for honesty and practical guidance.

Strategic Economics: Economic and Proforma Analysis
Strategic Economics is a nationally recognized urban economics consulting firm. They providegovernmental entities, developers, community groups, and non-profit organizations with the economic analyses and strategic approaches necessary to create sustainable, high-quality places for people to live and work. Their areas of expertise include public finance, fiscal and economic impact analyses, economic development and retail strategies, market and feasibility analyses, real estate advisory services, and transit-oriented development. Strategic Economics excels at translating their technical work into materials that are accessible to any audience. Founded in 1998, Strategic Economics has 14 employees. They are a certified Women-Owned, Small Business, Alameda County Small Local Business, and California Small Business Enterprise.

InterEthnica: Outreach
Since 2004, InterEthnica has created multicultural marketing and public engagement campaigns designed to reach diverse populations throughout California. They excel in designing and implementing projects in over 50 languages, including English, Arabic, Spanish, Chinese, Vietnamese, Korean, and Tagalog and are especially effective in reaching low-income and Limited English Proficient (LEP) audiences. InterEthnica has developed a unique Total Market Approach to help government agencies effectively reach, clearly inform, actively engage, and encourage diverse communities to take action. The InterEthnica approach combines solid cultural research, community-based social marketing (CBSM), grassroots and grasstops techniques, cultural adaptation, public outreach and engagement, strong copywriting, and creative design.

Scope of Work
The consultant team has proposed a very deliberate scope and schedule for the project that will allow for City Council to review a set of proposed development standards in a little over a year from now, in the late fall of 2021. This timeline corresponds with the requirements of the SB2 Grant funding source, which dictates that a final invoice must be submitted no later than February 2022. City staff believes this scope will achieve all the goals set forth for this project, and is looking forward to beginning work with the consultant team and City residents. This

summary of the scope is intended to provide an overview of the phases of the project. Full details are included as part of the contract in Attachment 1.

1) **Task 1: Information Gathering**

The City is interested in determining whether existing development standards and guidelines are a barrier to development of multi-family housing. Building from the information contained in adopted planning documents, the project team will gather further information to provide context into the existing economic, political, and regulatory environment for development in Santa Cruz.

a. Task 1A: Kick off Meeting
b. Task 1B: Planning Document Review
c. Task 1C: Existing Conditions Analysis

2) **Task 2: Community Engagement**

The equity and inclusion-based outreach plan will make the best effort to ensure that voices traditionally left out of the planning process are heard, and the anti-racist lens of our strategy will serve to contextualize the project in the segregationist history of urban planning and housing policy and the need for reforms to undo the harms of past policies.

a. Task 2A: Engagement Strategy
b. Task 2B: Identifying Engagement Methods
c. Task 2C: Implementation

3) **Task 3: Draft Objective Standards**

The test-fits will determine if there are physical factors preventing development from reaching the 2.75 FAR allowed in the General Plan. Strategic Economics will build a pro forma model that estimates the feasibility of three development prototypes under the City's existing policies and standards.

These findings will help the City understand what factors – physical, economic, and regulatory – may be preventing properties with Mixed-Use General Plan land use designations from pursuing redevelopment. This understanding will inform the project, as we will use the objective standards to address development standards that may be subduing housing production.

a. Task 3A: Test-fit Existing Objective Standards
b. Task 3B: Develop Draft Objective Standards
c. Task 3C: Visualize Draft Objective Standards
d. Task 3D: Refine Draft Objective Standards

4) **Task 4: Public Hearings**

a. Planning Commission
b. City Council

The scoring committee was impressed by the thoroughness of the proposed scope, and in particular, by the approach to outreach and education throughout the process. UPP has an excellent track record of delivering complete and timely projects that bring urban design and land use planning together to meet the goals expressed by a community. Strategic Economics has worked on feasibility studies for other Bay Area municipalities and is currently working with the Santa Cruz Economic Development Department on the Economic Development Strategy, so they have familiarity with the City. InterEthnica has ample experience in successfully reaching diverse populations through a combination of cultural translation and culturally based social

marketing and ensuring that the voices of these populations are represented in project outcomes. City Staff is confident that this team will create a thorough and effective community process that will result in a set of development standards that balance the diverse needs of the community and allow for new housing that will enhance the qualities of Santa Cruz that we all value.

Optional Tasks

The proposed scope of work includes two optional tasks related to analysis of existing parking efficiency and recommended parking supply rates under Tasks 1 and 3 respectively. Planning staff is interested in maintaining the option to execute these tasks, without committing to them at this point. The analysis may or may not be necessary, based on the analysis by the Urban Designer in understanding the existing conditions under Task 1 and on the pro forma analysis conducted under Task 3. It is possible that the proposed scope will provide sufficient information related to parking, making a formal analysis by a traffic engineer unnecessary. However, staff is aware that the proposed objective standards will be reviewed by the California Coastal Commission prior to taking effect inside the Coastal Zone, and it may be useful to include a robust quantitative analysis of any recommended changes to parking rates. For these reasons, City staff is recommending that the Council authorize the City Manager to request completion of these optional tasks at a future date, at his discretion.

Role of the Planning Commission

Members of the Planning Commission have expressed interest in the Objective Development Standards process, and the City Council previously contemplated the Planning Commission's role in the process. City staff wishes to ensure that the Planning Commission plays an appropriate role that adds value to the process of creating thorough and well-accepted development standards for multi-family housing. Staff has identified several factors below to consider in deciding the best role for the Planning Commission to play in this process.

No CAC or TAC recommended

None of the four proposals submitted for this project recommended using a Planning Commission subcommittee, Community Advisory Committee (CAC) or Technical Advisory Committee (TAC) for this project. Traditionally, using these types committees is one possible way to effectively gather input from members of the community or technical trades (like architects, engineers, and other relevant experts), and they can serve as a foundational component of the community engagement approach. For example, the Corridors Plan effort used a CAC that included a subcommittee of the Planning Commission, and the meetings provided a venue for community input. These committees typically require a great investment of staff and consultant time as well as commitment from the members of the committee to maintain a high level of participation over the course of the project, which is not always easy. These committees also tend to reinforce traditional patterns of participation and are not approachable to a diverse range of citizens who may have time constraints, require language translation services, need accessibility accommodations, or do not feel empowered to express their point of view in these venues.

Broad outreach is a City priority

Given the City's goal of having broad, inclusive, and thorough community engagement, all of the proposals recommended using less traditional outreach tools to ensure that City residents who have previously been excluded from participation are welcomed and encouraged to join this conversation.

This project to create objective development standards follows the work done on the terminated Corridors Plan, so City staff, Planning Commissioners, and City Councilmembers are aware that some community members are apprehensive about both the process and the outcomes. Unfortunately, the community outreach surrounding the Corridors Plan was not well received by the community, and many felt they were not heard, or that a minority of powerful voices dominated the conversation. Planning staff has noted that this sentiment was expressed by both proponents and opponents of the Corridors Plan. Therefore, staff is interested in creating a process that prioritizes equity and encourages participation of City residents that better represents the true diversity of Santa Cruz in terms of age, race, ethnicity, geographic location, tenancy, income level, physical ability, language, gender, employment status, educational attainment, interests, and many other factors. Empowering diverse voices is a valuable tool for increasing the likelihood that new housing meets the needs of all City residents, both now and in the future. The scope of work from UPP includes evaluation metrics to ensure that relevant constituencies and interests are represented, and incorporates additional targeted outreach if certain groups have not been successfully engaged. City staff has selected UPP and their team in part because of their impressive approach to community work and believe it will be very successful in the desired broad outreach approach.

Time constraints
This project is operating under a set of external constraints due to the funding source. The SB2 Grant requires that the project to be completed by the end of 2021. The State has not extended this timeline in recognition of the coronavirus pandemic which caused delays in the early stages of the procurement process.

If work starts in September, the consultant team will have just over one year to conduct the community outreach, perform the requisite spatial and economic analyses, draft proposed standards, refine the draft, and bring the final draft of development standards to public hearings with the Planning Commission and City Council. It is an ambitious schedule. The project team will need to operate efficiently and decisively in order to allow for a high level of broad community input and feedback while meeting project deadlines. Creating an additional hearing body or subcommittee to oversee the process will not add to that efficiency or decrease the amount of time spent on each task in the process.

Recommended Planning Commission role
Staff is recommending that the Planning Commission play an advisory role in the project with staff and consultants bringing detailed updates to the entire Commission at four key project milestones:

- Deliverable of Task 2, the Community Engagement Strategy;
- Results of Task 3A, the feasibility of the current development standards;
- Presentation of Task 3C, the visualization of the draft standards; and
- Formal hearing as part of Task 4

Given that the project is intended to go to hearing in the fall of 2021, these four project milestones will approximately create quarterly opportunies to meaningfully advise on the project direction. Staff believes this organizes the project in an ideal fashion to allow for a great deal of Planning Commission involvement while also providing staff and the consultant the necessary efficiency to successfully complete the project.

Commissioners will be notified of community engagement activities and invited to participate and follow the process as members of the general public (though a quorum of the Commission

attending any formal community meetings, even those held virtually, would likely trigger noticing as a formal Planning Commission meeting due to the requirements of the Brown Act). Staff will ensure that the Planning Commission is aware of opportunities to provide input into the process, will keep the Commission updated about the progress of the project, and will provide update reports as the project proceeds. Ultimately, the Draft Development Standards will be presented to the Planning Commission for a recommendation to the City Council in the fall of 2021. Commission comments and its recommendation will inform the subsequent discussion by the City Council. This approach will ensure that the Planning Commission is: 1) informed about the process and the community sentiments about the proposed development standards; 2) provided the opportunity to participate in engagement activities to benefit from the progressive outreach plan; and 3) able to establish a relationship to the project through the many opportunities to provide input on it while allowing staff and consultants to work more efficiently and maintain a much desired broader community outreach approach.

Next Steps

Community Development staff will be providing updates to the City Council at key milestones and decision points over the course of the next 15 months of this project. The next update will be in the fall of this year to discuss the Community Engagement strategy developed by consultants working together with City staff. That update will provide an opportunity for the City Council to learn about and comment on the approach and schedule for collecting meaningful input from city residents.

Conclusion

Creating Objective Development Standards for multi-family housing will allow developers, neighbors, future residents, city staff and decision-makers to share a common understanding of how, where, and how much housing will be built in Santa Cruz over the coming years. By drafting thoughtful and thorough objective development standards, based on community needs and preferences and informed by economic impacts and physical constraints, the City will have the right tools to support the development of needed housing throughout the City. City staff and consultants will be relying on community members to engage with this process and share their needs, concerns, desires, and hopes for housing, and in return, staff is committed to delivering an efficient and productive process that will result in tangible improvements to the process and design of housing development. Urban Planning Partners and their team will bring a strong social justice lens to the conversation about housing and will work diligently to ensure equitable access to the planning process. The Planning Commission will play a key advisory role at various project milestones and receive updates from staff and consultants over the next year of the planning process.

Environmental Review

Approval of this contract does not constitute a project under CEQA. The project itself will require separate environmental clearance at the time of Council's final consideration.

FISCAL IMPACT: The City has received an SB2 Grant in the amount of $310,000, payable on a reimbursement basis, to cover the cost of this contract as well as City Staff expenses related to the project to create objective development standards for multifamily and mixed-use housing. The contract in the amount of $179,935, assuming only non-optional tasks are conducted, will be paid by the Planning and Community Development Department, and reimbursed by the Grant funding source. The remaining approximately $130,000 in grant funding will go towards reimbursing staff time spent on the project, and these reimbursements will equate to General Fund salary cost savings.

Prepared by:	Submitted by:	Approved by:
Sarah Neuse Senior Planner	Lee Butler, AICP Director of Planning & Community Development	Martín Bernal City Manager
Matthew VanHua, AICP Principal Planner		

ATTACHMENTS:

1. Contract including scope, fee, schedule
2. Request for Proposals

PROFESSIONAL SERVICES AGREEMENT FOR
OBJECTIVE DEVELOPMENT STANDARDS FOR MULTI-FAMILY AND MIXED USE HOUSING

THIS AGREEMENT for professional services is made by and between the City of Santa Cruz ("City") and Urban Planning Partners, Inc. ("Consultant") (referred to individually as a "Party" and collectively, as the "Parties") as of August 25, 2020 (the "Effective Date").

NOW, THEREFORE, in consideration of each other's mutual promises, the Parties hereto agree as follows:

SECTION 1: SCOPE OF WORK

Consultant will furnish services as defined and described in the **Scope of Work**, attached hereto as **Attachment 2** and incorporated herein.

SECTION 2: RESPONSIBILITIES OF CONSULTANT

All work performed by Consultant, or under Consultant's direction, shall be rendered in accordance with the generally accepted practices, and to the standards of, Consultant's profession. Consultant represents and warrants that Consultant: (i) is fully experienced and properly qualified to perform the work and services provided for herein, (ii) has the financial capability required for the performance of the work and services, and (iii) is properly equipped and organized to perform the work and services in a competent, timely, and proper manner, in accordance with the requirements of this Agreement.

Due to the funding source of this project, Consultant shall also conform to the requirements set forth in **Attachment 1: SB2 Grant Agreement**, particularly those requirements stated in **Exhibits B and D of Attachment 1**.

Consultant shall not undertake any work beyond the **Scope of Work** set forth in **Attachment 2** unless such additional work is approved in advance and in writing by City. The cost of such additional work shall be reimbursed to Consultant by City on the same basis as provided for in Section 4.

If, in the performing the work, it is necessary to conduct field operations, security and safety of the job site will be the Consultant's responsibility excluding, nevertheless, the security and safety of any facility of City within the job site which is not under the Consultant's control.

Consultant shall meet with Lee Butler, Director of the Planning and Community Development Department, hereinafter called "Director", or other designated and authorized City personnel, or third parties as necessary, on all matters connected with carrying out of Consultant's services described in **Attachment 2**. Such meetings shall be held at the request of either Party. Review and City approval of completed work shall be obtained monthly, or at other intervals as may be mutually agreed upon during the course of this Agreement.

SECTION 3: RESPONSIBILITIES OF THE CITY

City shall make available to Consultant all necessary data and information in the City's possession and shall actively assist Consultant in obtaining such information from other agencies and individuals as needed.

The Director may authorize a staff person to serve as his or her representative. The work in progress shall be reviewed at such intervals as may be mutually agreed upon between the parties. The City will be the sole judge of

DRAFT

acceptable work. If the work is not acceptable, City will inform Consultant of the changes or revisions necessary to secure approval.

Due to the funding source of this project, City shall also conform to the requirements set forth in **Attachment 1: SB2 Grant Agreement**, and shall be responsible for ensuring Consultant compliance with the relevant sections of **Exhibits B and D to Attachment 1**.

SECTION 4: FEES AND PAYMENT

For services actually performed, the City will compensate Consultant at the rates set forth in the **Fee Schedule** detailed in **Attachment 4** and in accordance with the terms set forth therein. Payment for Consultant's services in carrying out the entire the Scope of Work shall be made within the budget limit, or limits shown, in **Attachment 4**. Such payment shall be considered the full compensation for all personnel, materials, supplies, and equipment used by Consultant in the Scope of Work.

Consultant agrees that the payments to Consultant specified in this Section 4 will constitute full and complete compensation for all obligations assumed by Consultant under this Agreement. Where conflicts regarding compensation may occur, the provisions of this section apply.

Variations from the budget for each task which are justified by statements indicating personnel time expended and submittal of a revised budget are allowed with prior City approval; however, in no event shall the total fee charged for the Scope of Work set forth in **Attachment 2** exceed the budget of **$179,935**, not including optional tasks, or **$203,235** if the optional tasks are authorized by the City Manager, without advance written City authorization in the form of an amendment or change order.

Invoices shall be itemized in accordance with the State Program guidelines, which include, but are not limited to:

- the project number: G502001
- a description of the task performed and the related objective or deliverable outlined in Schedule F: Project Timeline and Budget, the Scope of Work.
- Services timeframe
- time worked by each class of employee on each task and the expenses incurred for which billing is made.
- the percentage completion of each work task as identified in the Scope of Work in Attachment 2 and the overall percentage of completion of the total required services.
- Supporting documentation: Invoices muse be accompanied by reporting materials. Without the appropriate reporting materials invoices will not be paid. Supporting documentation may include, but is not limited to: receipts, registrations, progress reports including a written description of work performed to complete an objective or deliverable.

Unless otherwise specified in the fee schedule, payments shall be made monthly by the City within 30 days based on itemized invoices from the Consultant which list the actual costs and expenses. Invoice requirements may be modified by the City and will be modified in writing if changes are necessary.

All invoices shall contain the following affidavit signed by Consultant (if individual) or by a principal of Consultant’s firm (if Consultant is an entity):

> "I hereby certify [or as principal of Consultant] that the charge of (Insert invoice amount) as summarized above and shown in detail on the attachments is a fair and reasonable use of public funds, is in accordance with the terms of Agreement dated (Insert Agreement Date), and has not been previously paid."

DRAFT

SECTION 5: TRAVEL REIMBURSEMENT POLICY

The City agrees to reimburse Consultant and Consultant's employees for travel expenses according to this policy. It is expected that all travel expenses incurred while conducting activities on behalf of the City will be at reasonable rates and that vendors will exercise prudence in incurring these expenses. The total fees and costs of Consultant's services, including any travel expenses shall not exceed the amount described in the Fee Schedule.

1. Meals

1.1 Meals are reimbursed at the current GSA Meals & Incidental per diem rate by county (www.gsa.gov/travel). The City does not reimburse for actual costs for meals. Reimbursement is based solely on per diem rates. Do not submit meal receipts.

a) Travel before 8:00am qualifies for breakfast reimbursement.
b) Travel between 8:00am – 1:30pm qualifies for lunch reimbursement.
c) Travel between 1:30pm – 7:00pm (or later) qualifies for dinner reimbursement.
d) Days between hotel stays and days starting before 8am and ending after 7pm, qualify for the full GSA Meals & Incidental per diem rate.

2. Ground Transportation

2.1 Ground transportation is reimbursable when it is for travel between the vendor's place of business, their employee's home, an airport, or Santa Cruz hotel to their City work location.

a) Reasonable fees for taxis, shuttles, busses, trains, light rail, ride hailing services (Uber, Lyft), bike shares, and similar modes of transportation will be reimbursed. Receipts are required for reimbursement.
b) Personal vehicles include vehicles owned by the vendor or their employees.
c) Mileage will be reimbursed at the current IRS mileage rate.

2.2 Evidence of automobile liability insurance meeting the City's requirements must be provided.
Maps showing starting point, City work location, and total miles are required for reimbursement.

2.3 Car rentals are reimbursable when

a) Travel is necessary from an airport, from a vendor's place of business, or from an employee's home to the City work location.
b) The rental reservation is made as far in advance as is practical and the lowest possible price is obtained.
c) The car is returned with a full tank of gas.
d) The smallest vehicle necessary is rented.
e) Parking expenses are included in the GSA Meals & Incidental per diem rate. The City will not pay additionally for parking expenses.
f) Receipts are required for reimbursement.

3. Lodging

3.1 Lodging is reimbursable when the vendor must work on site for two or more consecutive days or a meeting goes past 10pm and the vendor's place of business, or their employee's home, is more than 60 miles away from Santa Cruz.

a) Lodging is reimbursed up to the current GSA rate by county (www.gsa.gov/travel).
b) Costs for hotel rooms above this rate are the responsibility of the traveler.
c) Receipts are required for reimbursement.

4. General

4.1 Travel expenses not listed above will not be reimbursed.

4.2 Travel reimbursements are paid after the completion of travel. There are no travel advances.

DRAFT

4.3 Exceptions to any of the above requirements require advance written permission from the Department Head of the department contracting with the vendor.

SECTION 6: CHANGES IN WORK

City may negotiate changes in the Scope of Work. No changes in the Scope of Work shall be made without the City's written approval. Any change requiring compensation in excess of the sum specified in Attachment 3 shall be approved in advance in writing by the City. Only City's authorized representative(s) is authorized to approve changes to this Agreement on behalf of City.

SECTION 7: TIME OF BEGINNING AND SCHEDULE FOR COMPLETION

Consultant shall begin work upon its receipt of a written Notice to Proceed. The Notice to Proceed shall not be issued until after this Agreement has been approved and authorized by the City.

The **Work Schedule** for completion of the work shall be as shown upon **Attachment 3**. In the event that major changes are ordered, the schedule for completion as stated in Attachment 3 will be adjusted by City so as to allow Consultant a reasonable period of time within which to complete any additional work which may be required as a result of the ordered changes.

Neither party will be held responsible for delay or default caused by declared emergencies, natural disasters, or any other cause which is beyond the party's reasonable control. Consultant will, however, make all reasonable efforts to remove or eliminate such a cause of delay or default and will, upon the cessation of the cause, diligently pursue performance of its obligations in this Agreement.

The City reserves the right to obtain the item(s) covered by this Agreement from another source during any on-going suspension of service due to the circumstances outlined above.

Consultant acknowledges that it is necessary for Consultant to complete its work on or before the completion date set forth in Attachment 4 in order to allow the City to achieve its objectives for entering into this Agreement. The Parties therefore agree that time is of the essence in the performance of this Agreement.

SECTION 8: TERMINATION

The City or Consultant may terminate the Agreement for convenience by providing written notice to the other party not less than 30 calendar days prior to an effective termination date.

The City or Consultant may terminate the Agreement for material breach of agreement by providing written notice to the other party not less than 14 calendar days prior to an effective termination date.

Upon notice of termination, the Consultant will immediately take action not to incur any additional obligations, costs or expenses, except as may be reasonably necessary to terminate its activities. The City's only obligation to the Consultant will be just and equitable payment for services authorized by, and received to the satisfaction of, the City up to and including the effective date of termination. All finished or unfinished work or documents procured or produced under the Agreement will become property of the City upon the termination date. The City reserves the right to obtain services elsewhere, and the defaulting Consultant will be liable for the difference between the prices set forth in the terminated Agreement and the actual cost to the City. In no event will the City be liable for any loss of profits on the resulting agreement or portion thereof so terminated. After the effective date of termination, Consultant will have no further claims against the City under the Agreement. Termination of the Agreement pursuant to this paragraph may not relieve the Consultant of any liability to City for damages sustained by City because of any breach of Agreement by Consultant, and City may withhold any payments to

DRAFT

Consultant for the purpose of set-off until such time as the exact amount of damages due City from Consultant is determined.

The rights and remedies provided in this section will not be exclusive and are in addition to any other rights and remedies provided by law or under the Agreement.

SECTION 9: INSURANCE

Prior to the beginning of and throughout the duration of the Agreement, Consultant will maintain and comply with the **Insurance Requirements** as set forth in **Attachment 5**. Consultant will insure the City against claims for injuries to persons or damages to property which may arise from or in connection with the performance of the work hereunder and the results of that work by Consultant, Consultant's agents, representatives, employees or subcontractors.

SECTION 10: INDEMNIFICATION

Consultant agrees, to the fullest extent permitted by law, to indemnify, defend, and hold harmless the City, its officials, officers, employees, agents, and volunteers (collectively, "Indemnitees"), from and against any and all liability, claim, action, loss, injury, damage, judgment, or expense, including attorneys' fees and costs ("Losses") caused by or result from the negligence, recklessness, or willful misconduct of Consultant, Consultant's officers, employees, agents, or subcontractors in any way related to this Agreement. Consultant's duty to indemnify and hold harmless Indemnitees shall not apply to the extent such Losses are caused by the sole or active negligence or willful misconduct of Indemnitees, as determined by an adjudicatory body or court of competent jurisdiction. The obligation to defend shall arise regardless of any claim or assertion that Indemnitees caused or contributed to the Losses.

In the event this Agreement involves the performance of design professional services by Consultant, Consultant's officers, employees, agents, or subcontractors, Consultant's costs to defend Indemnitees shall not exceed the Consultant's proportionate percentage of fault per Civil Code §2782.8. This section shall survive the termination or expiration of this Agreement.

SECTION 11: EQUAL EMPLOYMENT OPPORTUNITY/NON-DISCRIMINATION POLICIES

City's policies promote a working environment free from abusive conduct, discrimination, harassment, and retaliation; and require equal opportunity in employment for all regardless of race, religious creed (including religious dress and grooming practices), color, national origin (including language use restrictions), ancestry, religion, disability (mental and physical), medical condition, sex, gender (including gender identity and gender expression), physical characteristics, marital status, age, sexual orientation, genetic information (including family health history and genetic test results), organizational affiliation, and military or veteran status, or any other consideration made unlawful by local, State or Federal law. City requires Consultant to be in compliance with all applicable Federal and State and local equal employment opportunity acts, laws, and regulations and
Consultant is responsible for ensuring that effective policies and procedures concerning the prevention of abusive conduct, discrimination, harassment, and retaliation exist in Consultant's business organization. The City's current Equal Employment Opportunity and Non-Discrimination policies to which this Section applies may be viewed at http://www.codepublishing.com/CA/SantaCruz/?SantaCruz09/SantaCruz0983.html and http://www.cityofsantacruz.com/home/showdocument?id=59192.

SECTION 12: LEGAL ACTION/ATTORNEYS' FEES

If any action at law or in equity is brought to enforce or interpret the provisions of this Agreement, the prevailing party shall be entitled to reasonable attorneys' fees in addition to any other relief. The laws of the State of California,

DRAFT

with jurisdiction in the Santa Cruz County Superior Court, shall govern all matters relating to the validity, interpretation, and effect of this Agreement and any authorized or alleged changes, the performance of any of its terms, as well as the rights and obligations of Consultant and the City.

SECTION 13: AMENDMENTS

This Agreement may not be amended in any respect except by way of a written instrument which expressly references and identifies this particular Agreement, which expressly states that its purpose is to amend this particular Agreement, and which is duly executed by the City and Consultant. Consultant acknowledges that no such amendment shall be effective until approved and authorized by the Director. No representative of the City is authorized to obligate the City to pay the cost or value of services beyond the scope of services set forth in Attachment 2**.** Such authority is retained solely by the Director. Unless expressly authorized by the Director, Consultant's compensation shall be limited to that set forth in Attachment 3, Fee Schedule.

SECTION 14: MISCELLANEOUS PROVISIONS

1. Project Manager. Director reserves the right to approve the project manager assigned by Consultant to said work. No change in assignment may occur without prior written approval of the City.

2. Consultant Services Only. Consultant is employed to render professional services only and any payments made to Consultant are compensation solely for such professional services.

3. Independent Contractor. In the performance of its work, it is expressly understood that Consultant, including Consultant's agents, servants, employees, and subcontractors, is an independent contractor solely responsible for its acts and omissions, and Consultant shall not be considered an employee of the City for any purpose.

4. Consultant Not an Agent. Except as City may specify in writing, Consultant shall have no authority, express or implied, to act on behalf of City in any capacity whatsoever as an agent. Consultant shall have no authority, express or implied, pursuant to this Agreement to bind City to any obligation whatsoever.

5. Subcontractors. Subcontracting of work without prior approval of the City, may result in contract termination. If at any time, the City determines any subcontractor is incompetent or unqualified, Consultant will be notified and will be expected to immediately cancel the subcontract. Consultant shall require and verify that all subcontractors maintain insurance meeting all the requirements stated herein, and Consultant shall ensure that City of Santa Cruz, its officers, officials, employees, agents, and volunteers are additional insureds on insurance required from subcontractors.

6. Assignment. This Agreement shall not be assigned without first obtaining the express written consent of the Director or after approval of the City Council. Neither party may assign this Agreement unless this Agreement is amended in accordance with its terms.

7. Conflicts of Interest. Consultant owes City a duty of undivided loyalty in performing the work and services under this Agreement. Consultant on behalf of itself, its employees and subcontractors, covenants that it presently has no interest and shall not acquire any interest, direct or indirect, which would conflict in any manner or degree with the performance of services required to be performed under this Agreement. Consultant acknowledges that it is aware of and agrees to comply with the provisions of the Political Reform Act, Section 1090 of the Government Code, and the City's conflict of interest code. Consultant will immediately advise City if Consultant learns of a conflicting financial interest of Consultant's during the term of this Agreement. Consultant owes City a duty of undivided loyalty in performing the work and services under this Agreement.

DRAFT

8. City Property. The work, or any portion, of Consultant in performing this Agreement shall become the property of City. The Consultant shall be permitted to retain copies or such work for information and reference in connection with the City's use. All materials and work product, whether finished or unfinished, shall be delivered to City upon completion of contract services or termination of this Agreement for any reason. Consultant agrees that all copyrights which arise from creation of project-related documents and materials pursuant to this Agreement shall be vested in the City and Consultant waives and relinquishes all claims to copyright or other intellectual property rights in favor of City. Any work product related to this Agreement shall be confidential, not to be used by the Consultant on other projects or disclosed to any third party, except by agreement in writing by the City.

9. Consultant's Records. Consultant shall maintain accurate accounting records and other written documentation pertaining to the costs incurred for this project. Such records and documentation shall be kept available at Consultant's office during the period of this Agreement, and after the term of this Agreement for a period of three years from the date of the final City payment for Consultant's services.

10. Compliance with Laws. All activities of Consultant, its employees, subcontractors and/or agents will be carried out in compliance with all applicable federal, state and local laws.

11. Licensure. Consultant warrants that Consultant, its subcontractors and/or agents (if any) has/have complied with any and all federal, state, and local licensing requirements and agrees to provide proof of a current City of Santa Cruz Business Tax Certificate if:
    - Consultant, its subcontractor(s) and agent(s) is/are located in the City of Santa Cruz;
    - Will perform physical work in the City of Santa Cruz for 6 or more days annually; or
    - Will use company vehicles to deliver within the City of Santa Cruz for 6 or more days annually.

    For additional information and licensing requirements, view the City's Business Licenses and Permits webpage or call the Revenue and Taxation division at 831/420-5070.

12. Living Wage. Every contract for services to the City for $10,000 or more, is subject to City of Santa Cruz Living Wage Ordinance number 2000-25. The requirements of the Living Wage ordinance are provided in Santa Cruz Municipal Code Chapter 5.10.

13. Intentionally Omitted.

15. Dispute Resolution. The Parties agree to attempt in good faith to resolve through negotiation any dispute, claim or controversy arising out of or relating to this Agreement. Either party may initiate negotiations by providing written notice in letter form to the other party, setting forth the subject of the dispute and the relief requested. Promptly upon such notification, the Parties shall meet at a mutually agreeable time and place in order to exchange relevant information and perspective, and to attempt to resolve the dispute. In the event that no resolution is achieved, and if, but only if, the parties mutually agree, then prior to pursuing formal legal action, the parties shall make a good faith effort to resolve the dispute by non-binding mediation or negotiations between representatives with decision-making power, who, to the extent possible, shall not have had substantive involvement in the matters of the dispute. To the extent that the dispute involves or relates to a public works project, the Parties agree to attempt to resolve the dispute by complying with the claims process as set forth in Public Contract Code section 9204(e).

16. Force Majeure. Neither party hereto shall be considered in default in the performance of its obligation hereunder to the extent that the performance of any such obligation, except the payment of money, is prevented or delayed by an act of God, natural disaster, pandemic, or other peril, which is beyond the reasonable control of the affected party. Each party hereto shall give notice promptly to the other of the nature and extent of any Force Majeure claimed to delay, hinder or prevent performance of the services under this Agreement. In the event either party is prevented or delayed in the performance of its respective obligation by reason of such Force

DRAFT

Majeure, there may be an equitable adjustment of the schedule and Consultant compensation based on City's sole discretion.

17. Complete Agreement. This Agreement, along with any attachments, is the full and complete integration of the parties' agreement with respect to the matters addressed herein, and that this Agreement supersedes any previous written or oral agreements between the parties with respect to the matters addressed herein.

18. Severability. The unenforceability, invalidity or illegality of any provision(s) of this Agreement shall not render the other provisions unenforceable, invalid or illegal.

19. Waiver. Waiver by any party of any portion of this Agreement shall not constitute a waiver of the same or any other portion hereof.

20. Governing Law. This Agreement shall be governed by and interpreted in accordance with California law.

21. Contract Interpretation. Each party acknowledges that it has reviewed this Agreement and that the normal rule of construction to the effect that any ambiguities are to be resolved against the drafting party shall not be employed in the interpretation of this Agreement.

22. MacBride Principles/Peace Charter. City of Santa Cruz Resolution NS-19,378 (7/24/90) encourages all companies doing business in Northern Ireland to abide by the MacBride Principles and Peace Charter.

23. Intentionally Omitted.

24. Notices. If either party shall desire or is required to give notice to the other such notice shall be given in writing, via email or facsimile and concurrently by prepaid U.S. certified or registered postage, addressed to recipient as follows:

To CITY:
Planning and Community
Development Department
Sarah Neuse
809 Center St, Rm 206
Santa Cruz, CA 95060
sneuse@cityofsantacruz.com
831-420-5092

To CONSULTANT:
Urban Planning Partners
Lynette Dias
388 17th Street Suite 230
Oakland, CA 94612
ldias@up-partners.com
510-251-8210

25. Changes. Changes to the above information shall be given to the other party in writing ten (10) business days before the change is effective.

26. Counterparts. The parties may execute this Agreement in two or more counterparts, which shall, in the aggregate, be deemed an original but all of which, together, shall constitute one and the same instrument. A scanned, electronic, facsimile or other copy of a party's signature shall be accepted and valid as an original.

27. Warranty of Authority. The signatories to this Agreement warrant and represent that each is authorized to execute this Agreement and that their respective signatures serve to legally obligate their respective representatives, agents, successors and assigns to comply with the provisions of this Agreement.

[SIGNATURES ON FOLLOWING PAGE]

DRAFT

Approved As To Form:

By: _____ Date: _____

City Attorney

CONSULTANT

By: _____ Date: _____

Printed: _____ Title: _____

CITY OF SANTA CRUZ

By: _____ Date: _____

Martín Bernal
City Manager

DRAFT

ATTACHMENT 2: SCOPE OF SERVICES

DRAFT

ATTACHMENT 3: FEE SCHEDULE

Urban Planning Partners is proposing to prepare Objective Development Standards for Multi-Family and Mixed-Use Housing. **Our estimated fee for completion of the scope of work set forth in this proposal is $179,935.**

With optional tasks included the estimated fee would be $203,235.

A detailed breakdown of the estimated fee is provided in Table 1. We would undertake the work on a time-and-materials basis, with an estimated not-to-exceed amount without prior authorization.

DRAFT

ATTACHMENT 4: WORK SCHEDULE

Assuming work begins in September 2020 we can finish in early November 2021, one month ahead of the desired end date. See Figure 1 for our recommended schedule.

UPP is well equipped to provide flexible and consistent service even with unforeseen or unexpected circumstances. When we take on a project, we ensure that our staff has the time and support to complete the highest quality deliverables in a timely manner and within a pre-arranged and agreed upon schedule. We review staff allocations weekly and look 2-3 weeks ahead to ensure each team member has ample time to commit to their assigned projects and clients. We are always willing to go the extra mile to make sure we can adjust and meet the expectations of our client if schedules or timelines change. In the event the project falls behind in meeting a milestone date for any reason, we are dedicated to putting in extra effort or finding efficiencies later down the line to get back on track.

DRAFT

ATTACHMENT 5: INSURANCE REQUIREMENTS

A. CERTIFICATE REQUIREMENTS

The City will be issued a Certificate of Insurance (a Memorandum of Understanding will not be accepted) with the following minimum requirements:

1. Certificate(s) will show current policy number(s) and effective dates,
2. Coverage and policy limits will meet, or exceed, requirements below,
3. The Certificate Holder will be City of Santa Cruz, Risk Management, 333 Front St., Suite 200, Santa Cruz, CA 95060,
4. Certificate will be signed by an authorized representative,
5. An endorsement will be provided to show the City, its officers, officials, employees, and volunteers as additional insureds.

B. MINIMUM SCOPE AND LIMITS OF INSURANCE

Consultant acknowledges that the insurance coverage and policy limits set forth in this section constitute the minimum amount of coverage required. The City will be entitled to coverage for the highest limits maintained by Consultant. Coverage will be at least as broad as:

1. COMMERCIAL GENERAL LIABILITY (CGL): $1,000,000 PER OCCURRENCE
   1.1.1. Proof of coverage for $1 Million per occurrence including products and completed operations, property damage, bodily injury, personal and advertising injury will be provided on Insurance Services Office (ISO) Form CG 00 01 covering CGL. If a general aggregate limit applies, either the general aggregate limit will apply separately to this project/location or the general aggregate limit will be at least twice the required occurrence limit.

2. PROFESSIONAL LIABILITY (ERRORS AND OMISSIONS): $2,000,000 PER OCCURRENCE OR CLAIM, $2,000,000 AGGREGATE.
   2.1.1. Consultant will maintain insurance appropriate to Consultant's profession; with limit no less than $2,000,000 per occurrence or claim, $2,000,000 aggregate. Insurance must be maintained and evidence of insurance must be provided for at least five (5) years after date of completion of the services under this Agreement. If coverage is canceled or non-renewed and not replaced with another claims-made policy form with a Retroactive Date prior to the contract effective date or start of work date, Consultant must purchase "extended reporting" coverage for a minimum of five (5) years after completion of contract work.

3. AUTOMOBILE LIABILITY:
   3.1.1. Proof of coverage for $1,000,000 provided on ISO Form Number CA 00 01 covering any auto (Code 1), or if Consultant has no owned autos, hired, (Code 8) and non-owned autos (Code 9), per accident for bodily injury and property damage.

4. WORKERS' COMPENSATION AS REQUIRED BY THE STATE OF CALIFORNIA, WITH STATUTORY LIMITS, AND EMPLOYER'S LIABILITY INSURANCE: $1,000,000 per accident for bodily injury or disease. The Worker's Compensation policy must be endorsed with a waiver of subrogation in favor of the City for all work performed by the Consultant and Consultant's employees.

If Consultant maintains broader coverage and/or higher limits than the minimums shown above, the City of Santa Cruz requires and shall be entitled to the broader coverage and/or higher limits maintained by Consultant. Any available insurance proceeds in excess of the specified minimum limits of insurance and coverage shall be available to the City of Santa Cruz.

C. OTHER INSURANCE PROVISIONS

The insurance policies are to contain, or be endorsed to contain, the following provisions:

- ADDITIONAL INSURED STATUS

DRAFT

The City, its officers, officials, employees and volunteers are to be covered as additional insureds on the CGL policy with respect to liability arising out of work or operations performed by or on behalf of Consultant including materials, parts, or equipment furnished in connection with such work or operations. General liability coverage will be provided in the form of an endorsement to Consultant's insurance at least as broad as ISO Form CG 20 10 11 85, or if not available, through the addition of both CG 20 10 and CG 20 37 (if a later edition is used).

- PRIMARY COVERAGE
  For any claims related to this agreement, Consultant's General Liability and Automobile Liability insurance coverage will be **primary** insurance as respects the City, its officers, officials, employees, and volunteers. Any insurance or self-insurance maintained by the City, its officers, officials, employees, or volunteers will be excess of Consultant's insurance and will not contribute with it.

- NOTICE OF CANCELLATION
  Each insurance policy required above shall state that the coverage shall not be canceled, except with notice to the City.

- WAIVER OF SUBROGATION
  Consultant hereby grants to the City a waiver of any right to subrogation which any insurer of said Consultant may acquire against the City by virtue of the payment of any loss, including attorney's fees under such insurance. Consultant agrees to obtain any endorsement that may be necessary to effect this waiver of subrogation, but this provision applies regardless of whether or not the City has received a waiver of subrogation endorsement from the insurer.

- SELF-INSURED RETENTIONS
  Any self-insured retentions must be declared to and approved by the City. City may require Consultant to purchase coverage with a lower retention or provide proof of ability to pay losses and related expenses. The policy language shall provide, or be endorsed to provide, that the self-insured retention may be satisfied by either the named insured or City.

- ACCEPTABILITY OF INSURERS
  Insurance is to be placed with insurers with a current A.M. Best's rating of no less than A:VII, unless otherwise acceptable to the Entity.

- CLAIMS MADE POLICIES
  If any of the required policies provide coverage on a claims-made basis:

1. The Retroactive Date must be shown and must be before the date of the contract or the beginning of contract work.
2. Insurance must be maintained and evidence of insurance must be provided for at least five (5) years after completion of the contract of work.
3. If coverage is canceled or non-renewed, and not *replaced with another claims-made policy form with a Retroactive Dat*e prior to the contract effective date, the Consultant must purchase "extended reporting" coverage for a minimum of *five (5)* years after completion of contract work.

- VERIFICATION OF COVERAGE
  Consultant will furnish the City with original certificates and amendatory endorsements or copies of the applicable policy language effecting coverage required by this clause. All certificates and endorsements are to be received and approved by the City before work commences. However, failure to obtain the required documents prior to the work beginning will not waive the Consultant's obligation to provide them. The City reserves the right to require complete, certified copies of all required insurance policies, including endorsements required by these specifications, at any time.

DRAFT

D. SUBCONTRACTORS

Consultant shall require and verify that all subcontractors maintain insurance meeting all the requirements stated herein, and Contractor shall ensure that City is an additional insured on insurance required from subcontractors.

E. SPECIAL RISKS/CIRCUMSTANCES

City reserves the right to modify these requirements, including limits, based on the nature of the risk, prior experience, insurer, coverage, or other special circumstances.

DRAFT

Exhibit A

AUTHORITY, PURPOSE AND SCOPE OF WORK

1. Authority

Pursuant to Health and Safety Code section 50470, subdivision (b)(1)(A), the State of California Department of Housing and Community Development (the "Department" or "State") has established the Planning Grants Program ("PGP; or the "Programn as defined in Section 102 of the Guidelines) for Local Governments and Localities. This Standard Agreement, along with all its exhibits (the "Agreemenr), is entered into under the authority of, and in furtherance of, the purpose of the Program. Pursuant to Health and Safety Code Section 50470, subdivision (d), the Department has issued the Senate Bill 2 Planning Grants Program Year 1 Guidelines (the "Guidelines") dated December 2018 governing the Program, and a Notice of Funding Availability C'NOFAn) dated March 28, 2019.

2. Purpose

In accordance with the authority cited above, the Grantee has been awarded financial assistance in the form of a grant from the Program. The Department has agreed to make the grant to provide financial assistance for the preparation, adoption and implementation of a plan for Accelerating Housing Production and Streamlined Housing Production (as defined in Section 102 of the Guidelines) pursuant to the terms of the Guidelines, the NOFA, and this Agreement. By entering into this Agreement and thereby accepting the award of the Program funds, the Grantee agrees to comply with the terms and conditions of the Guidelines, the NOFA, this Agreement, the representations contained in the application, and the requirements of the authority cited above. **Based** on the representations made by the Grantee, the State shall provide a grant in the amount shown in Exhibit B, Section 2.

3. Definitions

Terms herein shall have the same meaning as definitions in Section 102 of the Guidelines.

4. Scope of Work

Update planning documents, entitlement processes or zoning ordinances in accordance with the Grantee's Schedule F: Project Timeline and Budget, as provided by the Grantee in the SB 2 Planning Grant Program application used for subsequent approval by the Department.

6. Department Contract Coordinator

The Contract Coordinator of this Agreement for the Department is the Housing Policy Development Manager, or the Manager's designee. Unless otherwise informed, any

Exhibit A

notice, report, or other communication required by this Agreement shall be mailed by first class mail to the Department Contract Coordinator at the following address:

Department of Housing and Community Development
Housing Policy Development
Land Use Planning Unit
Attention: PGP Program Manager
2020 West El Camino Avenue, Suite 500
Sacramento, CA 95833
P. 0. Box 952050
Sacramento, CA 94252-2050

EXHIBIT B

BUDGET DETAIL AND PAYMENT PROVISIONS

1. **Application for funds**

   A. The Department is entering into this Agreement on the basis of, and in reliance on facts, information, assertions and representations contained in the Application and any subsequent modifications or additions thereto approved by the Department. The Application and any approved modifications and additions thereto are hereby incorporated into this Agreement.

   B. The Grantee warrants that all information, facts, assertions and representations contained in the Application and approved modifications and additions thereto are true, correct, and complete to the best of the Grantee's knowledge. In the event that any part of the Application and any approved modification and addition thereto is untrue, incorrect, incomplete, or misleading in such a manner that would substantially affect the Department's approval, disbursement, or monitoring of the funding and the grant or activities governed by this Agreement, the Department may declare a breach hereof and take such action or pursue such remedies as are provided for breach hereof.

2. **Grant and Reimbursement Limit**

   The maximum total amount granted and reimbursable to the Grantee pursuant to this Agreement shall not exceed $310,000.

3. **Grant Timelines**

   A. This Agreement is effective upon approval by all parties and the Department, which is evidenced by the date signed by the Department on page one, Standard Agreement, STD 213 (the "Effective Date").

   B. All Grant funds must be expended by June 30, 2022.

   C. The Grantee shall deliver to the Department all final invoices for reimbursement on or before February 28, 2022, to ensure meeting the June 30, 2022 deadline. Under special circumstances, as determined by the Department, the Department may modify the February 28, 2022 deadline.

   D. It is the responsibility of the Grantee to monitor the project and timeliness of draws within the specified dates.

EXHIBIT B

4. **Allowable Uses of Grant Funds**

A. The Department shall not award or disburse funds unless it determines that the grant funds shall be expended in compliance with the terms and provisions of the Guidelines, the NOFA, and this Agreement.

B. Grant funds shall only be used by the Grantee for project activities approved by the State that involve the preparation and adoption of project activities as stated in the scope of work, project description, project timeline and other parts of the application, and eligible activities and uses pursuant to Article III of the Guidelines.

C. Grant funds may not be used for administrative costs of persons employed by the Grantee for activities not directly related to the preparation and adoption of the proposed activity.

D. The Grantee shall use no more than 5 percent of the total grant amount for costs related to administration of the project.

E. A Grantee that receives funds under this Program may use a subcontractor. The subcontract shall provide for compliance with all the requirements of the Program. The subcontract shall not relieve the Grantee of its responsibilities under the Program.

F. After the contract has been executed by the Department and all parties, approved and eligible costs for eligible activities may be reimbursed for the project(s) upon completion of deliverables in accordance with Schedule F: Project Timeline and Budget and the Statement of Work and subject to the terms and conditions of this Agreement.

G. Only approved and eligible costs Incurred for work mmr the NOFA date, continued past the date of execution and acceptance of the Standard Agreement and completed during the grant term will be reimbursable.

H. Approved and eligible costs incurred Q[iQ[to the NOFA date are ineligible.

5. **Performance**

The Grantee shall take such actions, pay such expenses, and do all things necessary to complete the scope of work specified in Exhibit A and as incorporated by the SB 2 Program application in accordance with the schedule for completion set forth therein and within the terms and conditions of this Agreement.

EXHIBIT B

6. **Fiscal Administration**

A. The Grantee is responsible for maintaining records which fully disclose the activities funded by the PGP grant. Adequate documentation for each reimbursable transaction shall be maintained to permit the determination, through an audit if requested by the State, of the accuracy of the records and the allowability of expenditures charged to PGP grant funds. If the allowability of expenditure cannot be determined because records or documentation are inadequate, the expenditure may be disallowed, and the State shall determine the reimbursement method for the amount disallowed. The State's determination of the allowablity of any expense shall be final, absent fraud, mistake or arbitrariness.

B. Work must be completed prior to requesting reimbursement. The Department may make exceptions to this provision on a case by case basis. In unusual circumstances, the Department may consider alternative arrangements to reimbursement and payment methods based on documentation demonstrating cost burdens, including the inability to pay for work.

C. Prior to receiving reimbursement, the Grantee shall submit the following documentation:

1) Government Agency Taxpayer ID Form (GovTIN; Fi$cal form);

2) A Request for Funds on a form provided by the Department; and

3) Any and all documentation requested by the Department in the form and manner as outlined in the following subsection D.

D. Grantee shall submit all required reimbursement documentation to the following address:

Department of Housing and Community
Development Housing Policy
Development
Land Use Planning Unit
Attention: PGP Program
Manager
2020 West El Camino Avenue, Suite 500
Sacramento, CA 95833
P. 0. Box 952050
Sacramento, CA 94252-2050

E. The Grantee shall submit invoices for reimbursement to the Department according to the following schedule: Page4of5

EXHIBIT B

1) At maximum, once per quarter; or

2) Upon completion of a deliverable, subject to the Department's approval; and

3) At minimum, one invoice for reimbursement annually.

The Department will use the 2019 calendar year beginning with January, with first requests for reimbursement accepted on or after September 30, 2019.

F. The request for reimbursement must be for a minimum of 15 percent of the maximum grant amount awarded. The Department may consider exceptions to the minimum amount requested on a case-by-case basis. All invoices shall reference the contract number and shall be signed and submitted to the Department's Program Manager at the address provided above in Section 6, item D of Exhibit 8. Invoices shall include at a minimum the following information:

1) Names of the Grantee's personnel performing work;

2) Dates and times of project work;

3) Itemized costs in accordance with the Schedule F: Project Timeline and Budget and Statement of Work, Including identification of each employee, contractor, subcontractor staff who provided services during the period of the invoice, the number of hours and hourly rates for each of the Grantee's employees, contractor{s), sub-recipient(s) or subcontractor's staff member(s), authorized expenses with receipts, and contractor, sub-recipient and subcontractor invoices; and

4) Any other documents, certifications, or evidence deemed necessary by the Department prior to disbursement of grant funds.

G. The Department will reimburse the Grantee directly for all allowable project costs as promptly as the Department's fiscal procedures permit upon receipt of an itemized signed invoice.

H. The Department recognizes that budgeted deliverable amounts are based upon estimates. Grantees may request, in writing, a budget adjustment across deliverables subject to written approval by the Department, as long as the total budget does not exceed the maximum amount awarded to the Grantee.

I. Grant funds cannot be disbursed until this Standard Agreement has been

EXHIBIT B

fully executed.

J. Grant fund payments will be made on a reimbursement basis; advance payments are not allowed. The Grantee, its subcontractors and all partners, must have adequate cash flow to pay all grant-related expenses prior to requesting reimbursement from the Department. The Department may consider alternative arrangements to reimbursement and payment methods based on documentation demonstrating cost burdens, including the inability to pay for work pursuant to Section 601(f) of the Guidelines.

K. The Grantee will be responsible for compiling and submitting all invoices, supporting documentation and reporting documents. Invoices must be accompanied by reporting materials where appropriate. Invoices without the appropriate reporting materials will not be paid.

1) Supporting documentation may include, but is not limited to; purchase orders, receipts, progress payments, subcontractor invoices, timecards, or any other documentation as deemed necessary by the Department to support the reimbursement to the Grantee for expenditures incurred.

L. The Grantee will submit for reimbursements to the Department based on actual costs incurred, and must bill the State based on clear and completed objectives and deliverables as outlined in the application, in Schedule F: Project Timeline and Budget, the Statement of Work, and/or any and all documentation incorporated into this Standard Agreement and made a part thereof.

M. The Department may withhold 10 percent of the grant until grant terms have been fulfilled to the satisfaction of the Department.

EXHIBIT D

PGP TERMS AND CONDITIONS

1. Reporting

A. During the term of the Standard Agreement the Grantee shall submit, upon request of the Department, a performance report that demonstrates satisfaction of all requirements identified in this Standard Agreement.

B. Upon completion of all objectives and deliverables required to fulfill this contract pursuant to Schedule F: Project Timeline and Budget and the Scope of Work, Exhibit A, Section 4, and as referred to in Exhibit B, Section 6, subsection K. within this Standard Agreement, the Grantee shall submit a final close out report in accordance with Section 604, subsection (b), and as instructed in Attachment 3 of the December 2018 Planning Grants Program Guidelines. The close out report shall be submitted with the final invoice by the end of the grant term as listed in Exhibit B, Section 3, subsection C.

2. Accounting Records

A. The Grantee, its staff, contractors and subcontractors shall establish and maintain an accounting system and reports that properly accumulate incurred project costs by line. The accounting system shall conform to Generally Accepted Accounting Principles (GAAP), enable the determination of incurred costs at interim points of completion, and provide support for reimbursement payment vouchers or invoices.

B. The Grantee must establish a separate ledger account for receipts and expenditures of grant funds and maintain expenditure details in accordance with the scope of work, project timeline and budget. Separate bank accounts are not required.

C. The Grantee shall maintain documentation of its normal procurement policy and competitive bid process (including the use of sole source purchasing), and financial records of expenditures incurred during the course of the project in accordance with GAAP.

D. The Grantee agrees that the state or designated representative shall have the right to review and to copy any records and supporting documentation pertaining to the performance of the Standard Agreement.

E. Subcontractors employed by the Grantee and paid with moneys under the terms of this Standard Agreement shall be responsible for maintaining accounting records as specified above.

EXHIBIT D

3. Audits

A. At any time during the term of the Standard Agreement, the Department may perform or cause to be performed a financial audit of any and all phases of the award. At the Department's request, the Grantee shall provide, at its own expense, a financial audit prepared by a certified public accountant. The State of Califomia has the right to review project documents and conduct audits during and over the project life.

1) The Grantee agrees that the Department or the Department's designee shall have the right to review, obtain, and copy all records and supporting documentation pertaining to performance of this Agreement.

2) The Grantee agrees to provide the Department or the Department's designee, with any relevant information requested.

3) The Grantee agrees to permit the Department or the Department's designee access to its premises, upon reasonable notice, during normal business hours for the purpose of interviewing employees who might reasonably have information related to such records and inspecting and copying such books, records, accounts, and other material that may be relevant to a matter under investigation for the purpose of determining compliance with statutes, Program guidelines, and this Agreement.

B. If a financial audit is required by the Department, the audit shall be performed by an independent certified public accountant. Selection of an independent audit firm shall be consistent with procurement standards contained in Exhibit D, Section 8 subsection A. of this Standard Agreement.

1) The Grantee shall notify the Department of the auditor's name and address immediately after the selection has been made. The contract for the audit shall allow access by the Department to the independent auditor's working papers.

2) The Grantee is responsible for the completion of audits and all costs of preparing audits.

3) If there are audit findings, the Grantee must submit a detailed response acceptable to the Department for each audit finding within 90 days from the date of the audit finding report.

C. The Grantee agrees to maintain such records for possible audit after final payment pursuant to Exhibit D, Section 3, subsection E. below, unless a longer period of records retention is stipulated.

1) If any litigation, claim, negotiation, audit, monitoring, inspection or other action has been started before the expiration of the required record retention period,

all records must be retained by the Grantee, contractors and sub-contractors until completion of the action and resolution of all issues which arise from it. The Grantee shall include in any contract that it enters into in an amount exceeding $10,000, the Department's right to audit the contractor's records and interview their employees.

2) The Grantee shall comply with the caveats and be aware of the penalties for violation of fraud and for obstruction of investigation as set forth in California Public Contracts Code Section 10115.10.

D. The determination by the Department of the eligibility of any expenditure shall be final.

E. The Grantee shall retain all books and records relevant to this Agreement for a minimum of (3) three years after the end of the term of this Agreement. Records relating to any and all audits or litigation relevant to this Agreement shall be retained for five years after the conclusion or resolution of the matter.

4. <u>Remedies of Non-performance</u>

A Any dispute concerning a question of fact arising under this Standard Agreement that is not disposed of by agreement shall be decided by the Department's Housing Policy Development Manager, or the Manager's designee, who may consider any written or verbal evidence submitted by the Grantee. The decision of the Department's Housing Policy Development Manager or Designee shall be the Department's final decision regarding the dispute.

B. Neither the pendency of a dispute nor its consideration by the Department will excuse the Grantee from full and timely performance in accordance with the terms of this standard Agreement.

C. In the event that it is determined, at the sole discretion of the Department, that the Grantee is not meeting the terms and conditions of the Standard Agreement, immediately upon receiving a written notice from the Department to stop work, the Grantee shall cease all work under the Standard Agreement. The Department has the sole discretion to determine that the Grantee meets the terms and conditions after a stop work order, and to deliver a written notice to the grantee to resume work under the Standard Agreement.

D. Both the Grantee and the Department have the right to terminate the Standard Agreement at any time upon 30 days written notice. The notice shall specify the reason for early termination and may permit the grantee or the Department to rectify any deficiency(ies) prior to the early termination date. The Grantee will submit any requested documents to the Department within 30 days of the early termination notice.

E. There must be a strong implementation component for the funded activity through this Program, including, where appropriate, agreement by the locality to formally adopt the completed planning document. Localities that do not formally adopt the funded activity could be subject to repayment of the grant.

F. The following shall each constitute a breach of this Agreement:

EXHIBIT D

1) Grantee's failure to comply with any of the terms and conditions of this Agreement.

2) Use of, or permitting the use of, grant funds provided under this Agreement for any ineligible costs or for any activity not approved under this Agreement.

3) Any failure to comply with the deadlines set forth in this Agreement unless approved by the Program Manager.

G. In addition to any other remedies that may be available to the Department in law or equity for breach of this Agreement, the Department may at its discretion, exercise the following remedies:

1) Disqualify the Grantee from applying for future PGP Funds or other Department administered grant programs;

2) Revoke existing PGP award(s) to the Grantee;

3) Require the return of unexpended PGP funds disbursed under this Agreement;

4) Require repayment of PGP Funds disbursed and expended under this agreement;

5) Seek a court order for specific performance of the obligation defaulted upon, or the appointment of a receiver to complete the obligations in accordance with the PGP Program requirements; and

6) Other remedies available at law, or by and through this agreement. All remedies available to the Department are cumulative and not exclusive.

7} The Department may give written notice to the Grantee to cure the breach or violation within a period of not less than 15 days.

5. <u>Indemnification</u>

Neither the Department nor any officer or employee thereof is responsible for any injury, damage or liability occurring by reason of anything done or omitted to be done by the Grantee, its officers, employees, agents, its contractors, its sub-recipients or its subcontractors under or in connection with any work, authority or jurisdiction conferred upon the Grantee under this Standard Agreement. It is understood and agreed that the Grantee shall fully defend, indemnify and save harmless the Department and all of the Department's staff from all claims, suits or actions of every name, kind and description brought forth under, including, but not limited to, tortuous, contractual, inverse condemnation or other theories or assertions of liability occurring by reason of anything done or omitted to be done by the Grantee, its officers, employees, agents contractors, sub-recipients, or subcontractors under this Standard Agreement.

6. <u>Waivers</u>

No waiver of any breach of this Agreement shall be held to be a waiver of any prior or subsequent

breach. The failure of the Department to enforce at any time the provisions of this Agreement, or to require at any time, performance by the Grantee of these provisions, shall in no way be construed to be a waiver of such provisions nor to affect the validity of this Agreement or the right of the Department to enforce these provisions.

7. **Relationship of Parties** .

It is expressly understood that this Standard Agreement is an agreement executed by and between two independent governmental entities and is not intended to, and shall not be construed to, create the relationship of agent, servant, employee, partnership, joint venture or association, or any other relationship whatsoever other than that of an independent party.

8. Third-Party Contracts

A. All state-government funded procurements must be conducted using a fair and competitive procurement process. The Grantee may use its own procurement procedures as long as the procedures comply with all City/County laws, rules and ordinances governing procurement, and all applicable provisions of California state law.

B. Any contract entered into as a result of this Agreement shall contain all the provisions stipulated in the Agreement to be applicable to the Grantee's sub-recipients, contractors, and subcontractors. Copies of all agreements with sub-recipients, contracts, and subcontractors must be submitted to the Department's program manager.

C. The Department does not have a contractual relationship with the Grantee's sub-recipients, contractors, or subcontractors, and the Grantee shall be fully responsible for all work performed by its sub-recipients, contractors, or subcontractors.

D. In the event the Grantee is partnering with another jurisdiction or forming a collaborative effort between the Grantee and other jurisdictions who are grantees of the SB 2 Planning Grants Program, the Grantee acknowledges that each partner and/or all entities forming the SB 2 Planning Grants Program collaborative are in mutual written agreement with each other but are contractually bound to the Department under separate, enforceable contracts.

E. In the event the Grantee is partnering with another jurisdiction or forming a collaborative effort with other entities that are not grantees of the SB 2 Planning Grants Program, the Department shall defer to the provisions as noted in subsections 8(8) and 8(C) of this part.

9. Compliance with State and Federal Laws, Rules, Guidelines and Regulations

A. The Grantee agrees to comply with all state and federal laws, rules and regulations that pertain to construction, health and safety, labor, fair employment practices, equal opportunity, and all other matters applicable to the grant, the Grantee, its contractors or subcontractors, and any other grant activity.

B. During the performance of this Agreement, the Grantee assures that no otherwise qualified person shall be excluded from participation or employment, denied program

benefits, or be subjected to discrimination based on race, color, ancestry, national origin, sex, gender, gender identity, gender expression, genetic information, age, disability, handicap, familial status, religion, or belief, under any program or activity funded by this contract, as required by Title VI of the Civil Rights Act of 1964, the Fair Housing Act (42 USC 3601-20) and all implementing regulations, and the Age Discrimination Act of 1975 and all implementing regulations.

C. The Grantee shall include the nondiscrimination and compliance provisions of this clause in all agreements with its sub-recipients, contractors, and subcontractors, and shall include a requirement-in all agreements with all of same that each of them in tum include the nondiscrimination and compliance provisions of this clause in all contracts and subcontracts they enter into to perform work under the PGP.

D. The Grantee shall, in the course of performing project work, fully comply with the applicable provisions of the Americans with Disabilities Act (ADA) of 1990, which prohibits discrimination on the basis of disability, as well as all applicable regulations and guidelines issued pursuant to the ADA. (42 U.S.C. 12101 et seq.)

E. The Grantee shall adopt and implement affirmative processes and procedures that provide information, outreach and promotion of opportunities in the PGP project to encourage participation of all persons regardless of race, color, national origin, sex, religion, familial status, or disability. This includes, but is not limited to, a minority outreach program to ensure the inclusion, to the maximum extent possible, of minorities and women, and entities owned by minorities and women, as required by 24 CFR 92.351.

10. <u>Litigation</u>

A. If any provision of this Agreement, or an underlying obligation, is held invalid by a court of competent jurisdiction, such invalidity, at the sole discretion of the Department, shall not affect any other provisions of this Agreement and the remainder of this Agreement shall remain in full force and effect. Therefore, the provisions of this Agreement are, and shall be, deemed severable.

B. The Grantee shall notify the Department immediately of any claim or action undertaken by or against it, which affects or may affect this Agreement or the Department, and shall take such action with respect to the claim or action as is consistent with the terms of this Agreement and the interests of the Department.

11. <u>Changes in Terms/Amendments</u>

This Agreement may only be amended or modified by mutual written agreement of both parties.

12. <u>State-Owned Data</u>

A. Definitions

1) Work:

The work to be directly or indirectly produced by the Grantee, its employees, or by and of the Grantee's contractor's, subcontractor's and/or sub-recipient's employees under this

EXHIBIT D

Agreement.

2) Work Product:

All deliverables created or produced from Work under this Agreement including, but not limited to, all Work and Deliverable conceived or made, or made hereafter conceived or made, either solely or jointly with others during the term of this Agreement and during a period of six months after the termination thereof, which relates.to the Work commissioned or performed under this Agreement. Work Product includes all deliverables, inventions, innovations, improvements, or other works of authorship Grantee and/or Grantee's contractor subcontractor and/or sub-recipient may conceive of or develop in the course of this Agreement, whether or not they are eligible for patent, copyright, trademark, trade secret or other legal protection.

3) Inventions:

Any ideas, methodologies, designs, concept, technique, invention, discovery, improvement or development regardless of patentability made solely by the Grantee or jointly with the Grantee's contractor, subcontractor and/or sub-recipient and/or Grantee's contractor, subcontractor, and/or sub-recipient's employees with one or more employees of the Department during the term of this Agreement and in performance of any Work under this Agreement, provided that either the conception or reduction to practice thereof occurs during the term of this Agreement and in performance of Work issued under this Agreement.

B. Ownership of Work Product and Rights

1) All work Product derived by the Work performed by the Grantee, its employees or by and of the Grantee's contractor's, subcontractor's and/or sub-recipient's employees under this Agreement, shall be owned by the Department and shall be considered to be works made for hire by the Grantee and the Grantee's contractor, subcontractor and/or subrecipient for the Department. The Department shall own all copyrights in the work product.

2) Grantee, its employees and all of Grantee's contractor's, subcontractor's and sub-recipient's employees agree to perpetually assign, and upon creation of each Work Product automatically assigns, to the Department, ownership of all United States and international copyrights in each and every Work Product, insofar as any such Work Product, by operation of law, may not be considered work made for hire by the Grantee's contractor, subcontractor and/or subrecipient from the Department. From time to time upon the Department's request, the Grantee's contractor, subcontractor and/or subrecipients, and/or its employees, shall confirm such

assignments by execution and delivery of such assignment, confirmations or assignment or other written instruments as the Department may request. The Department shall have the right to obtain and hold in its name all copyright registrations and other evidence of rights that may be available for Work Product under this Agreement. Grantee hereby waives all rights relating to identification of authorship restriction or limitation on use or subsequent modification of the Work.

EXHIBIT D

3) Grantee, its employees and all Grantee's contractors, subcontractors and sub-recipients hereby agrees to assign to the Department all Inventions, together with the right to seek protection by obtaining patent rights therefore and to claim all rights or priority thereunder and the same shall become and remain the Department's property regardless of whether such protection is sought. The Grantee, its employees and Grantee's contractor, subcontractor and /or subrecipient shall promptly make a complete written disclosure to the Department of each Invention not otherwise clearly disclosed to the Department in the pertinent Work Product, specifically noting features or concepts that the Grantee, its employees and/or Grantee's contractor, subcontractor and/or subrecipient believes to be new or different.

4) Upon completion of all work under this Agreement, all intellectual property rights, ownership and title to all reports, documents, plans, specifications and estimates, produced as part of this Agreement will automatically be vested in Department and no further agreement will be necessary to transfer ownership to Department.

13. <u>Special conditions</u>

The State reserves the right to add any special conditions to this Agreement it deems necessary to assure that the policy and goals of the Program are achieved.

Objective Development Standards for Multi-Family and Mixed-Use Housing

Submitted to:

City of Santa Cruz
Planning and Community Development Department

809 Center St, Rm 101

Santa Cruz, CA 95060

June 19, 2020

URBAN PLANNING PARTNERS INC.

Objective Development Standards for Multi-Family and Mixed-Use Housing

Submitted to:

City of Santa Cruz
Planning and Community Development Department

809 Center St, Rm 101

Santa Cruz, CA 95060

June 19, 2020

Prepared by:

Urban Planning Partners, Inc.
388 17th Street, Suite 230
Oakland, CA 94612
510.251.8210

URBAN PLANNING PARTNERS INC.

SCOPE OF WORK

This section outlines Urban Planning Partners' recommended approach and schedule for preparing Objective Development Standards for Multi-Family and Mixed-Use Housing. Our approach is informed by an examination of the project materials and previous housing work in Santa Cruz, including the 2017 Santa Cruz Voices on Housing Four Pronged Approach, Housing Blueprint Subcommittee (HBS) materials, Community Outreach Policy for Planning Projects, Corridors Plan materials, the 1024 Soquel Avenue Project, the Municipal Code, and other planning documents. In addition, Project Manager Meredith Rupp attended the 2019 National APA Conference session on Santa Cruz's housing outreach. Finally, our approach is informed by our previous Santa Cruz and other coastal community experience, our design and objective standards expertise, and our past success at engaging active and diverse communities.

Please see Section 8 for a breakdown of how resources will be allocated across tasks. In general, UPP will manage the project team and perform tasks related to policy analysis and urban design and producing written and presentation materials. Technical analysis from Fehr & Peers and Strategic Economics will inform the objective standards. InterEthnica will support UPP on the community engagement strategy and implementation.

PRELIMINARY SCOPE OF WORK

TASK 1 INFORMATION GATHERING

TASK 1A: KICK OFF MEETING

The project initiation task for the Objective Development Standards for Multi-Family and Mixed-Use Housing will provide an opportunity for the UPP Team to collaborate with the City in refining our recommended approach and scope of work. As part of this task, we will specifically:

- Debrief the City's community engagement efforts to date, including what has worked well, what has not worked well, and what the community's level of understanding is related to housing need and State laws.
- Understand where the City Council (Council) is leaning towards allocated density in Santa Cruz and develop a strategy to incorporate their direction into the scope of work.
- Identify baseline documents that shape planning in Santa Cruz with which the project team should get to know (see Task 1B).

- Understand the relationship between the City's existing design guidelines and objective standards and the scope of this project and learn about what has and has not worked well with the objective standards included in the Downtown Plan.
- Learn the most common issues the City faces with current development proposals that could be addressed with objective standards.
- Discuss the City's List of Potentially Affected Interests and how to prioritize, cluster, and/or set boundaries to feasibly and cost effectively address the community's diverse stakeholders.
- Review and finalize our approach and scope of work, including deliverables, schedule, and the scope of community engagement events.

UPP will revise the scope, schedule, and fee to reflect the outcomes of the kick-off meeting.

Deliverables:
- Kick-off meeting agenda and minutes
- Refined scope of work

TASK 1B: PLANNING DOCUMENT REVIEW

The UPP Team will review the plans and policies that shape planning in Santa Cruz, including plans and processes that have led to this project. We understand that any zoning ordinance changes will need to be within the buildout assumed in the General Plan EIR and that several Santa Cruz plans already include design guidelines and objective standards. During Task 1A, we will discuss how the current scope of work relates to previous documents and will finalize a list of applicable documents to review. We anticipate the list of applicable documents could include the following:

- General Plan and General Plan EIR
- Downtown Plan
- Corridors Plan draft products and stakeholder report
- Mission Street Urban Design Plan
- River/Front & Lower Pacific Design Guidelines & Development Incentives
- 2017 Santa Cruz Voices on Housing materials
- 2018 Housing Blueprint Subcommittee (HBS) Recommendations and associated materials
- Municipal Code, Zoning Ordinance
- Approved Planned Development Permits/ Development Agreements for mixed-use projects approved under the City's existing zoning

TASK 1C: EXISTING CONDITIONS ANALYSIS

As mentioned in the RFP, the City is interested in determining whether existing development standards and guidelines are a barrier to development of multi-family housing. Building from the information gathered in Task 1B, the project team will gather further information to provide context into the existing economic, political, and regulatory environment for development in Santa Cruz.

In order to gain further insight into how existing General Plan and Zoning regulations affect housing development, the project team will conduct one focus groups with developers to understand the economic landscape of housing development in the Santa Cruz region. The goal of the focus group will be to understand how conditions within the City's control, such as objective standards and impact fees, and conditions outside of the City's control, such as the cost of land and construction labor, might prevent new development from utilizing the full densities allowed under the General Plan. The data from the focus group will be supplemented with an analysis of economic data, including estimated rents/for-sale prices, land costs, and construction costs to fully understand the economic landscape of housing development in Santa Cruz.

As an optional task, the project team can request available parking occupancy surveys (including on-street and off-street parking occupancy data) for existing mixed-use and multi-family developments in the City's records. In lieu of this task, the project team will use the City's existing parking and transportation analyses to understand at a high level how development types and locations within Santa Cruz affect parking needs.

Lastly, our existing conditions research will also examine the demographics of Santa Cruz, using data from the American Community Survey, the Santa Cruz County Homeless Census, and other sources. The project team will use this research to create metrics and goals for the equity-driven research plan.

Using our analysis of the planning documents, developer interviews, and parking surveys, the project team will produce a presentation for City staff identifying the key factors affecting housing development in Santa Cruz. We will include a policy matrix showing how objective standards and entitlements processes for multi-family housing differ between zoning districts in Santa Cruz. The presentation will be shared at a project team meeting.

Deliverables:

- Existing Conditions Summary Power Point for presentation to City staff based on planning document review, developer interviews, economic data, and parking surveys (1 round of revision, if desired, following presentation to city staff)
- Demographic Snapshot (*1 round of review and revision*)

TASK 2 COMMUNITY ENGAGEMENT

The events of the last 3 months, especially the protests against police brutality on Black Americans, have reemphasized the urgent need to center racial justice in our work as urban planners. Our equity and inclusion-based outreach plan will make the best effort to ensure that voices traditionally left out of the planning process are heard, and the anti-racist lens of our strategy will serve to contextualize the project in the segregationist history of urban planning and housing policy and the need for reforms to undo the harms of past policies.

Given the history with the City's prior effort around zoning for housing and consistent with the City's Community Outreach Policy for Planning Projects, substantial community outreach will be critical. The UPP Team will work collaboratively with the City and the community to develop and implement an engagement strategy that is tailored to the goals of the project and responsive to the unique moment time we are living.

Key to the success of our strategy will be understanding the challenges and issues that the project team for the Corridors Rezoning project encountered. We understand that, despite the extensive outreach performed by the City, there was still strong and vociferous community opposition to amending the development standards to allow increased development intensity consistent with the 2030 General Plan.

The challenges faced by the Corridors Rezoning project show that the conversation around housing and development intensity needs to be reframed around the State's goals of increasing housing supply in high-opportunity, desirable areas such as Santa Cruz. Our engagement strategy will link the State's housing goals with the ongoing struggle to secure justice for communities of color who were harmed by exclusionary, segregationist housing policies of cities in the past. Lastly, we will emphasize the need to adopt objective standards due to the increasingly likelihood of further State intervention in local land use policies and processes. By reframing the conversations around the State's broader housing goals and their relationship to undoing harmful housing policies of the past, we will lay a foundation for the community engagement process to yield actionable input that will help us to implement the vision of the 2030 General Plan.

TASK 2A: ENGAGEMENT STRATEGY

UPP and InterEthnica will prepare a memo presenting different engagement tools and methods tailored to the following three goals we envision throughout the project's lifetime, as listed below.

- **Educate, Listen, and Understand.** We will discuss the project in the context of the State's housing goals and housing policy history. We will show and tell the Santa Cruz community what objective standards are and help them why they are needed/required. We will build on the City's past engagement efforts to continue to increase understanding and support for an increased housing supply and will listen to people's concerns and come to understand the parts of Santa Cruz that they want to maintain. To make the project more relevant to today's political and social realities, we will show the link between increased housing options and anti-racism (discussed more thoroughly in Task 2B).
- **Define and measure community character.** Input from the community will be used to identify key elements that contribute to Santa Cruz's neighborhood character, removing the subjective meaning of the phrase and building community ownership over the objective standards. The community will also gain the vocabulary they need to provide impactful feedback in the next phase of the project.
- **Shape and refine Objective Development Standards.** We will solicit input on design preferences and implementation questions through interactive tools and facilitated discussions. The community will be able to see how their feedback has been incorporated in the product(s).

Our outreach goals are directly tied to the overall project goal of creating community ownership. Through education, community members will be able to interact with the subject matter and provide input in a meaningful way. Community feedback will be used to identify existing urban design aspects that will be maintained in the objective standards, to formulate the actual objective standards, and to drill down into where which standards will be applied. By putting both a place-making and a place-keeping lens on the project, we will get increased participation and gain community trust. As mentioned later, we will include pictures taken by community members and capture them in their own voices in our materials, showing the community that we value their local knowledge.

LIST OF POTENTIALLY AFFECTED INTERESTS

We want to engage and gather meaningful input from Santa Cruz's active citizenry. There will be community-wide engagement in-person (pending COVID-19 concerns and social distancing protocols), online, and through traditional media. Where the list of potentially affected interests is an organized group, we can distribute meeting invites or other project communications to the group's leadership for distribution to their membership. Additionally, we can tack outreach activities onto previously scheduled group meetings or events to maximize participation. For broader categories of potentially affected interests (e.g., shoppers, commuters, employees), we will try to meet people where they are and leverage social media to reach people outside of established organizations.

However, it is not feasible to individually engage with everyone on the project's draft list of potentially affected interests. As mentioned in Task 1A, we will work with the City to prioritize the stakeholder list and create realistic bounds to our outreach efforts. The revised list of potentially affected interests will be included as an attachment to the Community Engagement Strategy Memo. Below we have listed some approaches to curating this list to be more targeted.

- Prioritize with a forced ranking system who will be the most important stakeholders to reach for this effort (i.e., targets for focus groups or more individualized meetings).
- Group the interest groups into larger categories and then hold webinars or meetings with these larger groups.
- Create a working group with members from each interest group (e.g., environmental, business, energy).
- Choose one leader for each interest group (e.g., environmental, business, energy) to interview.

Finally, we noted that architects/designers were not included in the list of potentially affected interests and would recommend adding them as a priority group as the end-user of the objective standards. As mentioned above, we recommend a focus group with area architects to help us refine the draft objective standards.

Deliverables:

- Community Engagement Strategy with Revised List of Potentially Affected Interests *(1 round of review and revision)*

TASK 2B: IDENTIFYING ENGAGEMENT METHODS

Our approach will be to learn from the City on where the community is currently at, what has worked well, and where there is opportunity for improvement. We have provided some preliminary options on engagement activities below but will prioritize and refine these options in the Engagement Strategy Memo after our conversations with the City and information gathering in Task 1. During these conversations with the City, we will also evaluate the feasibility of different types of outreach events given the state of the COVID-19 pandemic and State and local shelter-in-place orders.

Each outreach goal listed above will include a combination of larger events and activities of a smaller scope. Considering the ongoing need for social distancing and the changing conditions around COVID-19, the UPP Team will provide 2-3 options for each activity in our Engagement Strategy to accommodate options for in-person and remote (both digital and analog) engagement. Where possible, we recommend all in-person events also provide an option for remote participation. At the least, we will record live events and post them online for later viewing.

EDUCATE, LISTEN, AND UNDERSTAND

Messaging for the educational component will focus on what objective standards are, including what they can and cannot include and examples of objective standards from other communities; why objective standards are needed; what density looks like; the project goals; the intent and implications of State law; and what to anticipate throughout the planning process. The education component will build off the Santa Cruz Voices on Housing and HBS outreach.

Educational outreach activities could include the following:

- Website page to explain the project and link to examples of objective standards from other communities.
- Community-wide kick-off event.
- Focused stakeholder meeting kick-off events.
- Tabling at Westside, Downtown, and Live Oak Farmer's Markets, coffee shops, bike repair stores, garden centers, local parks, and other essential businesses.
- Announcements to faith-based organizations and community groups to introduce the project.
- Flyering at local restaurants to introduce the project.
- Sidewalk chalking, murals, and/or banners in select neighborhoods with housing in Santa Cruz statistics to raise awareness for the project and the housing need.

- Visualizations of what increased density looks like posted online and/or distributed via mail and email.
- Presentations with guest lectures at a civics, economics, or social studies class at local high schools, including Santa Cruz High School and Harbor High School, about housing policy history and its connection to racial justice and demystifying density. These sessions will build empathy and advocacy for housing among a population that tends to be more open-minded.
- Anti-racism and housing talks with guest that shed light on how housing policy has historically perpetuated structural racism, illustrate the link between racism and single-family zoning, and link back to the project by illustrating how increasing the amount and diversity of housing types can combat structural racism. These talks would be informed by literature such as The Color of Law by Richard Rothstein, The Case for Reparations by Ta-Nahesi Coates, and other reputable sources. Although specific organizations have not been identified yet, these events could be hosted and publicized by organizations focused on racial justice such as the Santa Cruz County Community Coalition to Overcome Racism.

DEFINE AND MEASURE COMMUNITY CHARACTER

Community input on what makes Santa Cruz's urban character unique will build community ownership over the Objective Development Standards. Activities to achieve this goal could include:

- Presentation on urban design character of Santa Cruz framing the discussion on the characteristics of the urban fabric (e.g., street wall height, ground floor experience) rather than specific architecture. This could be presented as a study session on the Community Design General Plan Element.
- Meetings in a box or a community meeting with breakout sessions to define non-aesthetic elements of community character (e.g., diversity, community profile) and discuss how a diverse housing offering supports a diverse community.
- A data walk, art and storytelling campaign, or other methods from the Cultural Competence Continuum focused on inclusive engagement recognizing and valuing cultural differences. With permission, we will use images from the public in our deliverable(s) for greater sense of community authorship.
- A "Show and Tell" of favorite places, both in Santa Cruz (i.e., what makes Santa Cruz, Santa Cruz?) and beyond, shared on social media and/or posted in public spaces. With permission, we will use images from the public in our deliverable(s) for greater sense of community authorship.

SHAPE AND REFINE OBJECTIVE DEVELOPMENT STANDARDS

Upfront feedback can help us draft the objective standards and then subsequent feedback on the draft objective standards will be used to refine our products. Activities under this goal could include:

- Online discussion board on community members' hopes and fears for development that our team can then consider how to best address through objective standards.

- Facilitated group discussions with diverse members of the community to explore the idea of different standards within different design districts. The community can help determine the preferred neighborhood factors (e.g., road widths, predominant building form/height) that would dictate the design districts.
- Open house with posters highlighting different elements of draft of objective standards for discussion and feedback from community.
- Interactive website that allows participants to comment on visualizations of the draft objective standards.
- Focus group with active Santa Cruz architects to preview the objective standards and get feedback on implementation challenges or where clarification may be needed.

EQUITY AND INCLUSION

The City's commitment to reaching geographic, socio-economic, generational, and racially diverse groups throughout the outreach process is one that we admire and share. In the information gathering in Task 1C, the UPP Team will review Santa Cruz's demographic data to learn which populations are underrepresented and which neighborhoods will need more targeted efforts. Leaders of these groups and/or neighborhoods and service providers that serve these groups (e.g., health clinics, legal services) will be contacted to start building a relationship and gauging how to best engage these communities. If the group finds it valuable, a community ambassador could be appointed and compensated with a stipend to advise the project team and serve as a link between the project team and communities that may not trust City officials. If this is a City priority, the UPP Team could identify potential funding sources for a host of community ambassadors to be trained to serve as outreach consultants for not only this project, but other City planning or policy efforts.

The UPP Team will perform the following best practices, depending on which engagement activities are proposed in the Engagement Strategy Memo, to hear from a wide cross section of the community and to reduce barriers to participation for groups that are often excluded:

- Incentivize participation for underrepresented groups by compensating them for their time or offering gift cards, discounts, or other prizes.
- Use phone outreach to advertise meetings and opportunities for public input.
- Schedule outreach events and opportunities for feedback at places where people are already meeting or travelling to (e.g, Farmer's Markets, HOA meetings, garden supply stores) to reduce barriers related to transportation, scheduling, and childcare.
- Choose culturally appropriate meeting locations that are comfortable and conducive to the types of interactions we want to have.
- Partner with InterEthnica to translate and interpret outreach materials into Spanish and to build inclusion and social competence into our outreach strategy.
- For in-person gatherings, provide bike parking, food, and childcare as allowed under social distancing protocols.

- Recruit student volunteers to help with social media engagement and/or outreach to their peers at UC Santa Cruz, Cabrillo Community College, and/or high schools.
- Canvass in target neighborhoods with flyers, sidewalk chalking, or a preference survey to reach marginalized voices. Ideally, a community ambassador would be the canvasser.

Anti-Racism Lens

In addition to reaching audiences who are often excluded from the planning process, we see this project as an opportunity to educate community members who are vocal in the planning process on racism and housing. Through guest speakers, a book club, and/or facilitated discussions, we can show the community the racist past of housing policy and facilitate a realization that more housing and housing diversity is a vital part of racial justice. By tying the project to the larger narrative of identifying and dismantling structural racism currently in the spotlight, we can continue the momentum on this important issue, bring racial justice to the local level, avoid having to compete for attention, and gain the participation and support of people who may otherwise ignore or oppose the project.

We think this effort would be most successful if it is part of a city-wide process building off work already being done and including a wide range of partners. However, we can make this a component of the project regardless (see activities under the education goal)

Measuring Inclusion

We know our efforts to reach a diverse audience will only be impactful if they are successful. It will be important to track who we are hearing from and implement targeted efforts to reach communities and/or neighborhoods that are not represented in our responses. Using sign in sheets, exit polls, or check-in questions at our outreach activities, we will gather the age, race, ethnicity, and neighborhood of our outreach participants. It will be important to also differentiate between new participants and community members who have already been "counted" in our outreach activities. We will compare our numbers to the Santa Cruz population at large. This comparison will be most effective if we provide full transparency that will keep us accountable. On the project webpage and in our outreach materials, we will include visuals showing the makeup of Santa Cruz as a whole by age, race, ethnicity, and neighborhood compared to the makeup of our outreach participants. Where there are gaps, we will perform focus groups, interviews, and other targeted methods to ensure we hear from a representative cross section.

TASK 2C: IMPLEMENTATION

UPP will lead implementation of the outreach activities and InterEthnica will provide English to Spanish translation and interpretation services. Outreach activities will occur throughout the project timeline, scheduled at key junctures to infuse community input into our work products. Summaries of events will be posted on the project webpage, at which point we will also update our

demographics tracker (see Measuring Inclusion above). As previously mentioned, we can adapt the strategies we implement according to which populations and/or neighborhoods we may be missing.

We will tailor our engagement to the community (see Identifying Engagement Methods for more information on the full spectrum of outreach activities we are considering and would refine in partnership with the City). The budget included in this scope of work assumes 1 larger event for each outreach goal (i.e., educate, listen and understand; define and measure community character; and shape and refine objective development standards) and 2-3 smaller events or activities.

ANTICIPATED CHALLENGES

We know there are a lot of competing priorities and that the community could be suffering from meeting fatigue. Furthermore, because outreach around housing in Santa Cruz has been occurring almost continually since 2017, the community could have planning fatigue. One way to combat this is to tie our project to current events surrounding COVID-19 and racial justice. We can include messaging about why density isn't necessarily a driving factor for transmission of the virus and how smart growth provides many public health benefits. We can link housing policy to racial justice and show how diverse communities need different housing types, including higher-density housing. Finally, we can combat planning fatigue by clearly showing the community that they have been heard and how we are building off their input. Participants will be more motivated to return when they see their quote or picture in meeting materials or can see how their concern was addressed in the draft objective standards.

> *"I don't want endless meetings and outreach. I just want housing to get built without any fanfare except for the new residents being very excited to move in."*
>
> - *Resident quote from HBS' Survey on Community Outreach*

A second challenge will be related to remote engagement. The uncertainty of the pandemic means we will have to be adaptable and have contingency plans for remote meeting options. In addition, the remote nature of engagement means it can be harder to build trust and relationships and we will have to consider the digital divide when planning our outreach methods. The UPP Team is prepared to take on this challenge. UPP is currently leading a Community Engagement Problem-Solving Series, which includes researching digital tools and best practices and then sharing information and brainstorming solutions with Bay Area jurisdictions and development professionals. The solutions and best practices we gain from this work create a strong foundation on how to make remote community engagement work during the pandemic and beyond. In addition, by partnering with local community organizations, especially those that serve underrepresented communities, we will be going through trusted conduits to reach residents. Finally, by providing both in-person and remote meetings, participants can engage based on what works best for them.

In addition to changing the way we do outreach and community engagement, the COVID-19 pandemic also presents another challenge: increased fear of density. Much of the early media coverage blamed New York City's density for the severity of the COVID-19 outbreak there, and we

anticipate that some members of the community will cite these reports as a reason to oppose increased residential densities in Santa Cruz. However, further studies have shown that density plays a small factor in the spread of COVID-19, as the relative mildness of the outbreaks in hyperdense cities such as Seoul and Tokyo have shown. Furthermore, by increasing the supply and diversity of housing, density may actually serve to reduce overcrowding within individual dwelling units, thereby reducing the risk of COVID-19 spread.

The least likely potential engagement challenge is the biggest in magnitude: what should we do if the community flat-out does not want to change? We will minimize the risk of this outcome through targeted outreach that directly addresses the major community concerns raised in the Housing Voices Process, a racial equity lens, a large educational component explaining State law, and creating community ownership over the objective standards. Additionally, our experience has shown us that traditional engagement methods, such as town halls and public meetings, tend to have two major flaws: 1) presentations by City staff and consultants tend to be one-way discussions; and 2) open forums magnify the voices of a select few who are comfortable with public speaking or have extreme positive or negative feelings towards a project, not capture the wide diversity of a community's opinion on a given issue. The nature of our community process, with multiple avenues for input, will lower the barriers to participation and ensure that the full range of the community's opinions are gathered and addressed. However, we will need to think critically with the City about what our role as a consultant should be if the community does not support the project and how to make this effort successful given the struggles of the last effort.

Deliverables:

- All materials and presentations for planned engagement efforts *(2 rounds of review and revision)*
- Summaries of feedback from engagement activities *(1 round of review and revision)*

TASK 3 DRAFT OBJECTIVE STANDARDS

TASK 3A TEST-FIT EXISTING OBJECTIVE STANDARDS

In many cities, parking minimums, density maximums, FAR, and maximum height are misaligned and do not allow development to reach its full potential. We will perform up to five test-fits of the existing objective standards to understand if current zoning requirements are inhibiting development from achieving its maximum development potential. We will use the test-fits to determine if there are physical factors preventing development from reaching the 2.75 FAR allowed in the General Plan. It is important to note that in some cities, the zoning has been intentionally designed not to enable full development of the allowed density. When parking minimums are too high, height or dwelling unit/FAR is too low, this is often an indication that the community was not prepared to accept more housing, taller buildings, or a more progressive approach to parking. If this is the case in this community, it will be important for us to address these concerns through the

public outreach process. Strategic Economics will build a pro forma model that estimates the feasibility of three development prototypes under the City's existing policies and standards. The prototypes will be developed in partnership with UPP and will build off the test-fits to incorporate realistic assumptions about FAR, height, parking, affordable housing requirements, and other factors. Strategic Economics will develop a series of assumptions for the financial feasibility analysis, including construction costs, land costs, financing costs, infrastructure costs, market data, and revenue assumptions, and soft costs such as local and state fees. This information will be gathered from a review of published market data and insights from the focus groups.

The test-fits and financial feasibility analysis of housing development prototypes at different scales under Santa Cruz's current regulatory and market conditions will help the team understand the factors that may be inhibiting market-rate residential and mixed-use development in Santa Cruz, as well as the construction of inclusionary affordable units within projects. Our findings will help the City understand what factors – physical, economic, and regulatory – may be preventing properties with Mixed-Use General Plan land use designations from pursuing redevelopment. This understanding will inform our work, as we will use the objective standards to address development standards that may be subduing housing production.

Deliverables:

- Five (5) test fits with associated development statistics
- Economic feasibility test for three (3) development prototypes

TASK 3B DEVELOP DRAFT OBJECTIVE STANDARDS

Drawing on the test fits, developer interviews, and extensive community outreach, we will develop a set of draft objective standards that will target the following goals:

- Ensure that zoning controls are aligned, so that they can enable development to achieve the maximum density allowed in the General Plan.
- Create a clear set of quantitative standards for the design of the building envelope, including height, setbacks, stepbacks, frontage controls, and usable open space.
- Allow for a variety of building expression through a clearly articulated menu of options for building material, style, and ground floor frontages. This may include performance criteria, which can be numerically demonstrated (e.g., a residential ground floor may require at least 6 stoops per 200 feet of frontage; a building façade may require least 2 materials be used per 150 feet of frontage).
- Reflect community preferences in how the standards may change by geographic area, corridor type, or other neighborhood factors.

Using the pro forma model built in Task 3A, Strategic Economics will develop an interactive Excel-based tool that can allow a user to test the impact of up to three (3) policy options for mixed-use and multifamily areas. The policy options enabled by the tool will be based on the proposed objective standards, and may incorporate aspects such as height, density (FAR or dwelling units/acre), parking requirements, ground-floor retail requirements, and inclusionary housing requirements. The tool will

help to educate the public and decision-makers on the types of policies and tools that can affect the probability of housing and mixed-use development in Santa Cruz.

As an optional task, Fehr & Peers can develop parking supply rates for multi-family and mixed-use developments for up to five zoning designations, districts, or overlays based on information collected in Tasks 1 and 2. These parking standards would take into consideration how the type of development – mixed-use, market rate residential, affordable housing, and senior housing – and proximity to transit affect parking needs. Fehr & Peers would summarize the revised parking supply rates in a brief technical memorandum for use by the project team. This task is optional given the City's existing parking and transportation analyses and up to date understanding of community parking needs at a high level. However, should technical analysis be desired to gain a more nuanced understanding of parking needs, Fehr & Peers can provide this.

The development controls may be drafted as amendments to the existing zoning designations, through a district-based approach, or through a distinct set of objective standards that can overlay on any multi-family site. We will work with City staff to understand the best way to create the final product.

Deliverables:

- Draft Objective Standards strategy memorandum outlining the preferred method for updating Objective standards (*1 round of review*)
- Excel-based financial analysis tool (1 *round of review and revision*)
- Matrix of proposed draft objective standards for each zoning designation, district, or overlay (*2 rounds of review and revision*)
- Optional Deliverable [not included in budget]: Parking Supply Rates Memorandum (*1 round of review*)
- Optional Deliverable [not included in budget]: Checklist to help developers prepare designs that are compliant with the objective standards and to facilitate plan review for City staff

TASK 3C VISUALIZE DRAFT OBJECTIVE STANDARDS

The draft objective standards will be applied to the test-fit sites identified in Task 3A. For architectural standards (rather than massing/envelope standards), we will use images of existing buildings to demonstrate their relevance and application. The test fits will include an analysis of "neighborhood character" factors such as existing views, tree removal, and shade and solar access.

We will use these test fits, example images of standards, and diagrams to help illustrate the draft objective standards for community outreach, and to be included in the final deliverable, as appropriate.

Deliverables:

- Illustrative booklet visually demonstrating draft objective standards on test fit sites (*1 round of review and revision*)

TASK 3D REFINE DRAFT OBJECTIVE STANDARDS

After receiving feedback from the community on the draft objective standards, we will refine the objective standards into zoning ordinance amendments to create a final draft to be presented to Council for adoption. The project team will ensure that the amendments to the City's zoning ordinance conform sufficiently to the 2030 General Plan in order to prevent the need for further environmental review. This set of standards may then be refined again based on feedback from Council.

Deliverables:

- Administrative Draft Zoning Ordinance amendments implementing objective standards for residential and mixed-use residential development (*2 rounds review and revision)*

TASK 4 PUBLIC HEARINGS

Revised based on City staff's feedback, the Public Draft Zoning Ordinance amendments will then be presented to the Planning Commission and Council for feedback. The UPP Team will participate in and support these presentations as desired by staff. Depending on staff's preferred level of engagement, UPP can assist or lead in drafting agenda reports, presentations, and other meeting materials. The drafting of staff reports is listed as an optional item in the budget.

Deliverables:

- Public Draft Ordinances with City staff feedback
- Final Draft Ordinances with input from public and elected officials

Project Schedule

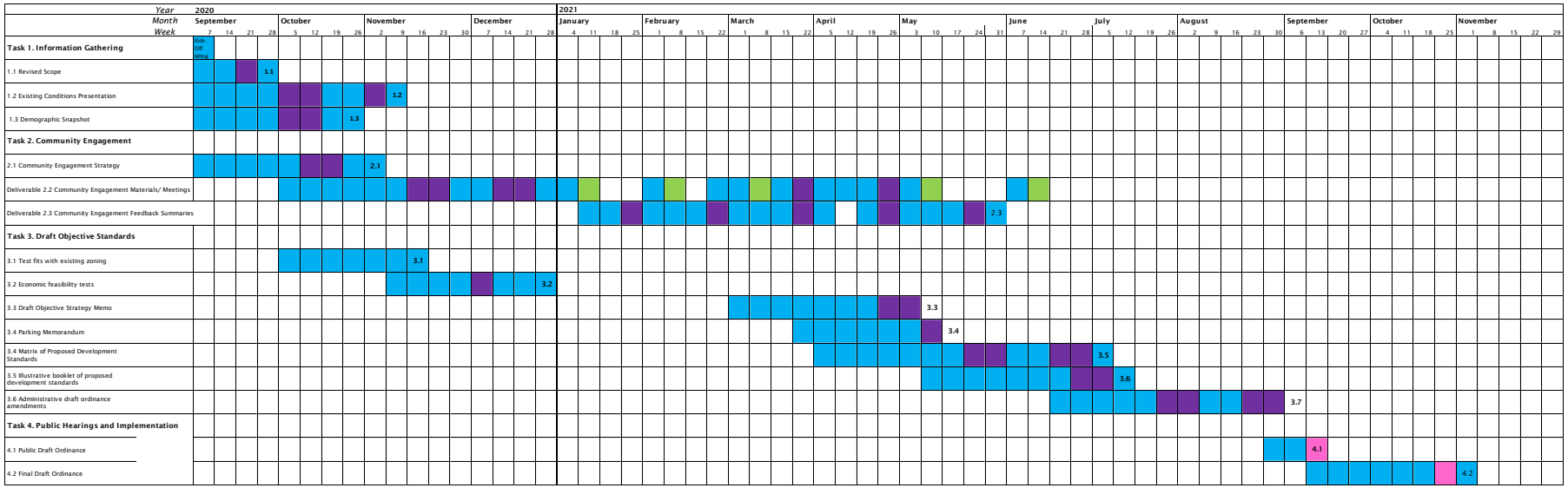

Project Deliverables

- **1.1** Revised Scope
- **1.2** Existing Conditions Memorandum
- **1.3** Demographic Snapshot
- **2.1** Community Engagement Strategy
- **2.2** Community Engagement Materials
- **2.3** Community Engagement Feedback Summaries
- **3.1** Test Fits (existing development standards)
- **3.2** Economic feasibility results
- **3.3** Development standards strategy memo
- **3.4** Parking Memorandum
- **3.5** Matrix of proposed development standards
- **3.6** Illustrative booklet of proposed development standards
- **3.7** Administrative draft zoning ordinance amendments
- **4.1** Public Draft ordinances
- **4.2** Final Draft Ordinances

Gantt Chart Legend

- Consultant Team Work
- City Review
- Community Outreach Event
- CC or PC Hearing

Table 1 Baseline Scope of Work Fee

	Urban Planning Partners						Strategic Economics				InterEthnica					
	Lynette Dias, Principal	Kristen Hall Senior Urban Designer	Meredith Rupp Project Manager	Emilio Balingit Project Planner	Graphics/Word Processing	Total	Sujata Srivastava, Principal	Sujata Srivastava, Derek Braun, Senior Associate	Associate	Total	Lisa Abboud, Principal	Deborah Oh, Associate Principal	Ayali Molne Puertas, Spanish Linguist	Translation/Interpretation	Total	Team Total
Hourly Rate:	$250	$235	$140	$120	$100		$235	$200	$140		$150	$150	$200	$175		
Task 1. Information Gathering																
A Kick-off Meeting	2	2	2		-	$ 1,250	-	-	-	-						$ 1,250
B Planning Document Review		8	2	8	-	$ 3,120	-	-	-	-						$ 3,120
C Existing Conditions Analysis	-	2	1	4		$ 1,090	2	2	-	$ 870						$ 1,960
D Summary Presentation	2	4	10	14	2	$ 4,720	-	-	-	-						$ 4,720
Subtotal for Task 1	4	16	15	26	2	$ 10,180	2	2	-	870					-	$ 11,050
Task 2. Community Engagement																
A Engagement Strategy	2	6	10	8		$ 4,270	-	-	-	-	2	20	2		3,700	$ 7,970
B Implementation*	12	28	70	80	40	$ 32,980	-	-	-	-		2	8	30	7,150	$ 40,130
Subtotal for Task 2	14	34	80	88	40	$ 37,250				-	2	22	10	30	10,850	$ 48,100
Task 3. Draft Objective Standards																
A Test Fits for Existing Standards		20		4	50	$ 10,180	16	24	74	$ 18,920						$ 29,100
B Develop Draft Development Standards	2	80	2	10	40	$ 24,780	10	20	60	$ 14,750						$ 24,780
C Visualize Draft Development Standards	1	8			30	$ 5,130	-	-	-	-						$ 5,130
D Refine Draft Development Standards	1	10	1		10	$ 3,740	-	-	-	-						$ 3,740
Subtotal for Task 3	4	118	3	14	130	$ 43,830	26	44	134	$ 33,670					-	$ 77,500
Task 4. Public Hearings																
A Planning Commission	-	4	8		6	$ 2,660										$ 2,660
B City Council	-	3	6		2	$ 1,745										$ 1,745
Subtotal for Task 4	0	7	14		8	$ 4,405				-					-	$ 4,405
Ongoing Task: Project Management																
Project Management & Administration		10	60	15		$ 12,550		-	-	$ -						
Project Team Meetings	10	24	48	30	-	$ 18,460	2			$ 470						$ 18,460
Subtotal for Project Management	10	34	108	45	-	$ 31,010	2	-	-	470					-	$ 31,480
TOTAL LABOR ESTIMATE																
hours	32	209	220	173	180		30	46	134		2	22	10	30		$ -
$						$ 126,675				$ 35,010					$ 10,850	$ 172,535
DIRECT COSTS																
1. Misc. Direct Costs						$ 4,500									$ 2,900	
TOTAL MISCELLANEOUS COSTS						$ 4,500										$ 7,400
TOTAL ESTIMATED FEE																
																$ 179,935
OPTIONAL ITEMS																
1 Parking Memorandum (Fehr & Peers)						$ 9,100										
2 Parking Survey (Fehr & Peers)						$ 9,000	per site									
3 Staff Reports (UPP)						$ 4,000										
4 Development Standards Checklist (UPP)						$ 1,200										
TOTAL OPTIONAL COSTS						$ 23,300										
TOTAL + OPTIONAL ITEMS																
																$203,235

*Engagement activities will be chosen in collaboration with the City. Budget assumes one larger event and 2-3 smaller activties per outreach goal.

It is assumed that all deliverables will be submitted digitally. UPP does not assume any printing costs for meeting materials or deliverables.

NOTICE INVITING PROPOSALS FOR

Objective Development Standards for Multi-Family and Mixed-Use Housing

Proposals Due: June 19, 2020, 5:00pm

Deliver proposals to:
sneuse@cityofsantacruz.com
Project Description:
The City of Santa Cruz is requesting proposals from planning and design consulting firms (consultant) to develop objective zoning standards to be incorporated into the municipal code to govern design of multi-family housing in the City of Santa Cruz via a robust and inclusive community engagement program.

For More Information:
The Request For Proposals document, dated May 2020, may be downloaded from the City's website or obtained from the Planning and Community Development Department, 809 Center St, Rm 101, Santa Cruz, California, 95060. For additional information or assistance, contact Sarah Neuse, Senior Planner, at (831)420-5290, email sneuse@cityofsantacruz.com.

The City reserves the right to reject any or all proposals and waive any informality or minor defects in proposals received.

1. GENERAL INFORMATION FOR VENDORS

1.1 Summary Scope of Work

The Planning and Community Development Department of the City of Santa Cruz is soliciting proposals from planning and urban design firms for **Objective Design Standards for Multi-Family Housing.** The City currently relies on a combination of objective and subjective design standards and guidelines, implemented through design review permits, to regulate the design of most buildings. The City is interested in creating a robust and thorough set of standards to govern the development of multi-family housing, both for exclusively residential development proposals and for mixed-use development proposals. The City is interested in pursuing a process that prioritizes geographic, socio-economic, generational, and racial equity in the public engagement approach and has identified a preliminary list of interests that may be affected by this project. The list is included as Attachment 3. The highest priority in regards to the standards is that they ensure that future multi-family residential development in Santa Cruz supports the City's vision, as stated in the 2030 General Plan, of creating a "compact, vibrant city that preserves the diversity and quality of its natural and built environments, creates a satisfying quality of life for its diverse population and workers, and attracts visitors from around the world."

1.2 Background

The Housing Accountability Act, as amended in 2019 by Senate Bill (SB) 330, specifies that subjective standards cannot be used by a jurisdiction between January 1, 2020 and December 31, 2024 to deny or reduce the density of projects unless specific findings of adverse public health and safety impacts are made. The City of Santa Cruz is interested in updating our zoning ordinance and review processes to ensure certainty in the development entitlement process for both applicants and the general public in terms of the design features that will be required in order for a housing project to be approved. The City is also committed to ensuring high-quality urban design and preserving the unique and diverse character of its neighborhoods and business districts. A significant portion of the City's existing commercial districts were identified for mixed-use development as part of the current General Plan, and there is beginning to be new investment and change in these areas. These areas are comprised of major intersections and primary transportation corridors through the city, and the sites will set the context for future development over the coming decades. Without objective development standards the City has limited ability to significantly influence urban design on these important sites, as well as in neighborhoods where multi-family housing development is planned.

1.3 Estimated Dollar Value

The City has applied for and received a grant from the SB 2 funds provided by the State of California to fund the development of objective development standards. The portion of this funding allocated to consultant services is expected to be up to approximately $180,000.

1.4 Contact

If you have any questions concerning this solicitation, please call contact Sarah Neuse, Senior Planner, by phone at (831) 420-5290 or by email at sneuse@cityofsantacruz.com.

To learn solicitation results, call Sarah Neuse after the due date.

1.5 Proposal Deadline Proposals are due no later than 5:00 pm on Friday, June 19, 2020. All proposals will be delivered, on or before the due date. **Late proposals may not be considered.**
Vendors will email or file share the proposal and any attachments to sneuse@cityofsantacruz.com on or before the due date.

1.6 Proposal Evaluation and Award

A contract for Objective Design Standards for Multi-Family Housing will be awarded based on the following factors. See Section 3.5 for specific review criteria and weighting:

1. Proposal is responsive when received on time and completed per instructions,
2. Proposal is compliant with specifications and industry standards,
3. Vendor is offering a competitive price,
4. Vendor is well-qualified. City may consider:
   a. Experience of the Vendor and any subconsultants;
   b. Past performance of the Vendor; and
   c. Overall timeline of the process

A vendor's failure to promptly respond to City's inquires for proposal clarification may result in determination of non-responsibility.

The contract will be awarded on an all or nothing basis and is tentatively scheduled to begin **September 2020.**

Vendors have the right to take exception to the specifications or terms to this solicitation. Any exceptions taken must be explained in the proposal. Any exceptions that contradict the City's terms and conditions, or contain provisions that are not in the best interest of the City will disqualify the vendor. If exceptions are not explained, the Vendor will comply with the specifications as stated in this solicitation.

The City reserves the right to reject any or all proposals and waive any informality or minor defects in proposals received.

1.7 Organization of this RFP Document

The Request For Proposals (RFP) is organized in these sections:

Section 1- General Information to Vendors: Contains summary scope of work, contact information, proposal due date, and general background information.

Section 2- Specifications: Provides details regarding the contract requirements.

Section 3- Process Instructions: Contains the tentative RFP schedule, explains how the proposals will be evaluated, and presents administrative information on the conduct of the RFP process.

Section 4- Terms and Conditions: Details the City's contract terms and conditions.

Section 5- Acknowledgement of Receipt Form: Informs City of Vendor's intent to submit proposal.

Section 6- Proposal Cover Page: Provides basic Vendor contact information and an authorized signature accepting the City's terms and conditions as stated in this solicitation.

Section 7- RFP Questionnaire: Presents questions for Vendor response.

Section 8- Fee Schedule: Provides format for submitting pricing. Fee Schedules will include all costs incidental to performing **ITEM** according to this solicitation.

Appendix 1 - Local Business Preference Certification

Appendix 2 – Potentially Affected Interests

SECTION 2: SPECIFICATIONS

SECTION 2: SPECIFICATIONS

2.1 Project Overview

The City of Santa Cruz is a mid-sized city of nearly 70,000 people located between the north shore of the Monterey Bay and the Santa Cruz Mountains. Commuting distance from Silicon Valley jobs, University of California Santa Cruz growth, and the idyllic seaside environment have put pressure on the Santa Cruz housing market at an increasing rate over the past decade. The City adopted the 2030 General Plan in 2012 after an extensive public outreach and participation campaign. The adopted plan is focused around smart growth principles and includes a vision for supporting alternative modes of transportation by adjusting land use patterns to create demand for bikes, buses, and safe pedestrian connections. The adopted 2030 General Plan allows for additional residential density in specific locations along high-volume roadways, and in certain circumstances, the allowed densities differ from those that are currently permitted by the City's Zoning Ordinance. Specifically, the adopted 2030 General Plan created new land use designations for mixed-use sites, and these designations were applied to properties fronting onto the City's major roadways.

The City embarked on an effort to update the zoning ordinance to match the envisioned land uses and residential densities in the 2030 General Plan in 2014. This effort spanned over two years and had a wide variety of community meetings and input focused on creating new mixed use zone districts to apply to the sites identified in the General Plan for additional density. As the process progressed, community members expressed dissatisfaction and surprise at the development intensities envisioned by the 2030 General Plan. The effort to create these mixed-use zone districts was halted in mid-2017 in favor of a broader community conversation around housing, and it was then officially terminated in August of 2019.

The City is now beginning a new effort to create objective design standards for all of the existing zone districts and General Plan land use designations that allow multi-family and mixed-use development. Currently, mixed use development is permitted in all areas zoned for commercial use, and parcels that have the higher General Plan densities combined with a commercial zone district are utilizing the City's planned development or development agreement processes in order to proceed through permitting. In order to promote high quality housing and urban design, the City Council accepted the recommendation to apply for an SB 2 grant to create objective standards for housing development.

Given the history with the City's prior effort around zoning for housing, substantial community outreach is necessary, and an equitable, broad, and effective community engagement process will be key to successful proposals. Due to other projects that the City Council may direct staff to complete, the exact parcels which carry the relevant zone districts and land use designations may be in flux, but the potential effort of moving these designations is beyond the scope of this project. However, should the Council direct staff to launch a project that includes amending the high-density mixed use General Plan land use designations and redistributing the residential capacity to other areas of the City (as no net loss of residential capacity is allowed under SB 330), coordination between the two projects would be necessary. Additional direction from Council is expected in the coming months, and, if applicable, pertinent info will be provided in addenda to this RFP.

The project to create objective development standards for multi-family development will require the consultant to prepare and manage a thorough community engagement strategy focused on helping community members understand and contribute meaningfully to the design and development requirements for housing in the City. The final product will consist of language that could be incorporated into the City's Municipal Code to address the design of all the properties currently zoned with three multi-family zone districts, and the properties in the mixed use districts created by Mixed Use General Plan land use designations. Each set of zoning standards needs to address the density range permitted in each of these zone districts and by the General Plan, and should respond to the needs of the public realm and streetscape, particularly when projects are built fronting on major collector streets. The Mixed-

Use General Plan land use designations include development capacities, defined by both a dwelling unit density and a floor area ratio, which will need to be accommodated on the designated sites. Some amount of site-specific planning and analysis will be required in order to test proposed design standards to determine feasibility of housing construction over the entire range of allowed development intensities. In the eight years since the adoption of the 2030 General Plan, only one site designated for Mixed Use, High Density has sought and acquired an entitlement to redevelop, and the proposed project used only about one third of the allowable 2.75 FAR for the property. City staff is curious as to why more properties with this designation are not pursuing redevelopment, and is interested in addressing any challenges in the development standards that may be subduing housing production. The successful vendor will assist in developing an analysis identifying the factors hindering development.

The City is open to considering alternative methods for regulating design based on any relevant factors, as determined by the consultant via a robust community engagement effort. Such factors could be based on distinct neighborhoods, zone district designations, roadway type and capacity, or other relevant features. The City is looking for a consultant team that can guide the public and City leadership through a design process that will yield a set of clear, objective design standards that will ensure that all new multi-family housing built in Santa Cruz utilizes high-quality urban design and produces durable, high-quality housing for diverse populations. Standards are expected to address acceptable materials, architectural styles, landscaping and building disposition, parking, height, setbacks, stepbacks, floor area ratio, and other standards necessary to accomplish the stated goals of the project.

The primary goals for this project are:

1) To create anequitable community engagement program with participation by a diverse range of City stakeholders. (See attached list of Potentially Affected Interests.)
2) To develop implementable, understandable, objective design standards that will effectively dictate design requirements for multi-family housing throughout the City, maintaining and enhancing the unique character of Santa Cruz.
3) To ensure a high level of ownership of outcomes by community members regarding the standards for various locations – high likelihood that the recommended standards will be approved by City decision-makers.

2.2 Responsibilities of Vendor

The successful firm will be responsible for providing the following professional services:

1) Developing the proposed scope of work necessary to achieve the City's stated goals.
2) Working with the City to determine the most appropriate and effective community engagement tools for the project, and considering the options and techniques that can be utilized in the next several months with the possibility of on-going social distancing. A list of potentially affected interests is included as Appendix 2 for reference.
3) Managing the planning and preparation for any and all community outreach meetings, events, or interviews.
4) Facilitating any and all community outreach meetings, events, or interviews, together with key City staff.
5) Producing materials necessary to facilitate any and all community engagement activities.
6) Conducting analysis to evaluate shade and solar acess effects of proposed development standards.
7) Conducting analysis sufficient to analyze required parking ratios for multi-family housing and associated mixed-use projects.
8) Drafting text, and diagrams or illustrations for use in the Municipal Code, to objectively regulate the development of multi-family housing in all relevant zone districts or areas of the City. The drafted standards should conform sufficiently to the General Plan in order to be covered by the General Plan EIR.
9) Participating in and supporting presentations to the Planning Commission and City Council, as requested.
10) Collaborating with City staff to draft agenda reports in advance of hearings and informational meetings with the Planning Commission and City Council.

The selected consultant team will produce, at minimum, the following deliverables:

1) Community Engagement strategy memo, addressing the attached list of potentially affected interests.

2) All materials and presentations necessary to conduct planned community engagement activities or meetings.
3) Summaries of feedback from community engagement activities.
4) Analysis of site standards necessary to accommodate development capacities identified by the General Plan.
5) Administrative Draft Ordinance amendments for exclusively residential development covering all properties in the multi-family zone districts.
6) Administrative Draft Ordinance amendments for mixed-use residential combined with commercial or industrial (including live/work) development covering all properties in the relevant zone districts.
7) Public Draft Ordinances incorporating feedback and edits from City staff.
8) Final Draft Ordinances incorporating feedback from staff, public, and elected/appointed officials.
9) Graphic Illustrations of design standards for inclusion with the zoning ordinance.
10) All products shall include Microsoft Word and PDF files with high-resolution graphics, and PowerPoint slides as necessary.

2.2.1 Responsibilities of City

City staff will be responsible for the following:

1) Approving the final scope of work necessary to achieve the City's stated goals.
2) Working with Vendor to determine the most appropriate and effective community engagement tools for the project.
3) Coordinating the logistics, scheduling, and materials needs for community outreach meetings, events, or interviews.
4) Attending and assisting with facilitation at any and all community outreach meetings, events, or interviews.
5) Reviewing and approving materials necessary to facilitate any and all community engagement activities.
6) Assisting Vendor in selecting an approach.
7) Reviewing and approving text and diagrams or illustrations for use in the Municipal Code to regulate the development of multi-family housing in all relevant zone districts or areas of the City.
8) Prepare for and present at hearings for the Planning Commission and City Council, supported by vendor.
9) Collaborate with vendor to prepare agenda reports in advance of hearings and informational meetings with the Planning Commission and City Council.

2.3 Basic Qualification of Vendor

The selected vendor will have relevant expertise, a proven track record of successfully completed projects, a passion for community engagement, and a creative and innovative approach for achieving the City's goals.

The ideal consulting firm would include the following disciplines and attributes:

1) A focus on urban design, architecture, landscape architecture, city planning, and community facilitation.
2) A highly organized and responsive team who listens to, partners with, and is passionate about collaboration with city staff, decision makers, and all sectors of the community.
3) A strategic project manager with substantial experience and success in community engagement, urban design, and public relations.
4) Talented writers, illustrators, and graphic artists that can prepare user-friendly and graphically enriched presentations, maps, diagrams, and architectural illustrations; qualified traffic engineer to guide parking recommendations.
5) An economic, developer, and/or planning professional who has experience evaluating the viability of construction allowed by potential objective standards, particularly at the higher density/intensity levels considered in the General Plan.
6) It is desirable to have experience developing objective standards in other communities.

2.4 Damage

The Vendor will be responsible for any damage to City property during the performance of this contract. In the event that there is damage to City property, the Vendor will immediately report the incident to the City in writing.

Any such damage will be repaired or replaced with same by the Vendor at his/her expense and to the satisfaction of the City.

2.5 Vendor's Employee Conduct

Vendor will agree to remove any employee whose conduct is improper, inappropriate, or offensive as determined by the City. A removed employee(s) is not to work on City premises without the written consent of the City. The Vendor will remove any employee from working in, or delivering to, City facilities who is convicted of a felony during his/her employment.

SECTION 3: PROCESS INSTRUCTIONS

3.1 RFP Schedule

The City will make every effort to adhere to the following schedule:

Action	DATE
1. Issue RFP	May 15, 2020
2. Deadline for submitting additional questions	May 29, 2020
5. City response to additional questions	June 5, 2020
6. **Proposal due date**	**June 19, 2020**
7. Oral presentations for finalists	July 8-10, 2020
8. Proposal evaluation completed	July 14, 2020
9. Notice of intent to award	July 17 2020

3.2 Proposal Format

Proposals are due no later than 5:00 pm on **Friday June 19, 2020**. All proposals will be emailed/fileshared to Sarah Neuse on or before the due date. **Late proposals may not be considered.**

The City will not be liable for any expenses incurred by Vendors responding to this solicitation.

Proposals should be organized as follows:

1. **Cover Letter.** Please include a cover letter stating project interest which includes:
   - A statement describing why your firm is qualified to complete the project and perform the work required in a responsive manner.
   - A description of the anticipated interaction between consultant and City.
   - Identification of the project manager and main point of contact.

2. **Preliminary Scope of Work and Recommended Project Schedule**. Provide a preliminary scope of work and provide comments on the scope. Indicate resources that will be allocated to each major task to meet the proposed schedule, and discuss your firm's flexibility and record in "catching up" if milestone dates are not met. Discuss your firm's commitments to other projects in the time frame coinciding with the proposed schedule for this project.

3. **Qualifications and Capabilities.** Provide a detailed discussion of the qualifications and experience of the Project Manager that would be assigned to this project. Provide additional information regarding the qualifications and experience of all others that will be assigned to work on the project team. Please submit resumes of only those individuals that will actually be assigned to work on the project. Indicate how your firm's resources will work together to complete this project. An organizational chart is recommended.

4. **Subconsultants.** Identify any subconsultants your firm will utilize to complete this project. Briefly describe your firm's past experience, working relationship and involvement in joint projects with these subconsultants.

5. **Related Project Experience**. Describe your firm's and your Project Manager's past performance on similar projects, including coordinating the work of subconsultants. Provide locations, description of work, work samples or links to samples, completion dates, and value of contracts. Address your firm's record of meeting schedules and controlling costs. Provide an explanation gauging how successful implementation of the referenced project experience has been in realizing the municipality's goals.

7. **Sample Products**. Gaining an understanding of the products prepared by the consulting firm is important for the evaluation committee. Please provide internet links (either to websites or to a file sharing site) to up to three comparable documents prepared by the consulting team.

8. **Project Team Consistency**. Explain how you can guarantee that the project team members will be accessible and able to complete the project without change.

9. **References**. Include name, address and phone number for a minimum of three (3) references you prepared similar projects.

10. **Fee Estimate**. Submit a fee estimate for each task outlined in the preliminary Scope of Work. Provide a breakdown of the fee for each task showing the estimated hours of each project staff member assigned to the task and the associated fee for that project staff member or subconsultant. Also provide hourly rate schedules for all key project staff, including subconsultants.

11. **Insurance Coverage.** Identify carriers, A.M. Best ratings, types and limits of insurance carried by your firm. Provide a statement verifying that your firm meets the insurance requirements contained in the City's standard Terms and Conditions.

12. **Additional Information.** Please provide a list of contracts/agreements terminated for convenience or default within the past three years, if any. List any litigation that now affects or may affect in the future the firm's ability to perform.

Vendors have the right to take exception to the specifications or terms to this solicitation. Any exceptions taken must be explained in the proposal. Any exceptions that contradict the City's terms and conditions, or contain provisions that are not in the best interest of the City will disqualify the vendor. If exceptions are not explained, the Vendor will comply with the specifications as stated in this solicitation.

3.3 Non-Response to RFP

In the event your business decides **not** to submit a proposal, please return the Acknowledgement of Receipt Form, Section 5. It would be helpful if you indicated why your business did not wish to submit a proposal.

3.4 RFP Addenda

The City may determine it is necessary to revise any part of this solicitation. Revisions will be made by written addenda and it is the Vendor's responsibility to comply with any addenda to this solicitation. Any addenda will be:

- Emailed to known interested vendors, and
- Posted on the City's website, www.cityofsantacruz.com, under Bidding Information, or
- Vendors may contact Sarah Neuse, Senior Planner at 831.420.5290 or by email to sneuse@cityofsantacruz.com.

3.5 Proposal Evaluation

RFP responses will be evaluated and ranked according to the criteria below by an evaluation committee composed of City staff. The evaluation committee will open and review the proposals in confidence. Proposals will be available to the public after contract award.

Criteria	Weight
1. Overall cost including vendor and anticipated City expenses.	15%

2. Proposed timeline.	10%
3. Quality and creativity of proposed scope of work and responsiveness to the issues identified in the RFP. Ability to communicate clearly and concisely.	20%
4. Technical skills and expertise of the team and the prime consultant's ability to manage a team to produce a complete and coordinated set of documents required by this project.	20%
5. Relevant experience managing effective public outreach in an inclusive and equitable fashion; quality of community engagement approach.	15%
6. Qualifications and experience of proposed subconsultants identified for this project.	10%
7. Familiarity with and proximity to the City of Santa Cruz.	10%

3.5.1 Proposal Evaluation Criteria Definitions

1. Overall cost including vendor and anticipated City expenses. – 15%

   The total cost of the contract will affect 15% of the overall evaluation. The lowest responsive offeror will be given the full points for this criterion and higher offers will be scored proportionally using the following formula:

   ((Lowest responsive offeror's price, including discounts & preferences / This offeror's price, including discounts & preferences) * 100 = Pre-weighted score) * 15%

   Proposed fees will be presented as not-to-exceed costs for the contract term and will include all professional fees and expenses.

2. Proposed timeline – 10%

   The City of Santa Cruz considers this project to be a priority for the Planning and Community Development Department and would like this process to be successful and complete as soon as possible. The duration of the proposed timeline will affect 10% of the overall evaluation. Projects must show schedules that complete work no later than December of 2021.

3. Quality of proposed scope of work and responsiveness to the issues identified in the RFP; ability to communicate clearly and concisely. – 20%

   Proposals will be evaluated for professionalism, thoroughness, relevance, and quality of writing. City staff will be relying on the text and graphics in the RFP itself to evaluate the ability of each respondent to communicate effectively in writing. Samples of work showing graphic communication skills may also be included.

4. Technical skills and expertise of the firm and their ability to manage a team of subconsultants to produce a complete and coordinated set of deliverables required by this project. – 20%

   Evidence of relevant technical expertise including qualifications and lists of recently completed projects by each team member will contribute 20% to the overall evaluation. Proposals should include

qualifications for all primary team members (all teams should include economic or related consultant) and should demonstrate the ability to coordinate and collaborate with the public, consultant team, and municipal staff. Proposals will be evaluated for the Vendor's qualifications, experience and references. The criteria will also include an evaluation of the Vendor's longevity, projected financial stability, and performance on similar contracts.

5. Relevant experience managing effective public outreach in an inclusive and equitable fashion; quality of community engagement approach. – 15%

   The City is deeply invested in ensuring an equitable and inclusive public engagement process. Prior experience reaching traditionally underrepresented communities and successful engagement across a range of social, age, and economic characteristics will contribute 15% to the overall evaluation. Proposals should explain how equity was achieved and identify metrics for measuring inclusivity in public engagement. The list of potentially affected interests included as Attachment 3 will be refined with the City during the kick-off phase of the project and should be used as a guide in proposing an effective and equitable community engagement process. Strategies for engagement that can accommodate the potential for ongoing social distancing should be included.

6. Qualifications and experience of proposed subconsultants identified for this project.– 10%

   Each team is expected to include an economic, developer, and/or planning professional capable of evaluating the viability of development projects, as well as any design or other professionals that the vendor deems necessary to produce a successful project. The expertise and documented experience of the proposed subconsultants will contribute 10% to the overall evaluation. Proposals should describe the work that each team member will contribute to the process and identify the qualifications of all team members.

7. Familiarity with and proximity to the City of Santa Cruz. – 10%
   Santa Cruz is a relatively small coastal community located between Silicon Valley and the Monterey Bay, and home to the University of California, Santa Cruz. Our demographic characteristics and political climate differ from communities in the Bay Area and elsewhere in the state. The City has a preference for teams that include at least one team member with previous experience in our community, this criterion will contribute 10% to the overall evaluation.

3.6 Evaluation of Semi-Finalists
After the initial proposal evaluation, the City may determine that additional information is needed to establish the final ranking of vendors. The semi-finalists will be contacted and may be asked to:

- Make an oral/video presentation by responding to pre-established questions,
- Conduct a scenario-based demonstration of the equipment or service,
- Revise the submitted proposal for the purpose of obtaining best and final offers, and/or
- Provide additional information to assist City in determining the best value vendor.

All semi-finalists will be given equal opportunity to provide the requested information to the City. Any oral presentations and/or demonstrations will be scheduled for a mutually agreed upon date, tentatively to be scheduled between July 8 and July 10, and will be at no cost to the City.

The Evaluation Committee will use all information collected to rank the semi-finalists in order of their ability to best meet the requirements of the City. The City will begin negotiating a firm contract with the highest ranked Vendor. If no agreement can be reached, negotiations will begin with the next ranked Vendor.

3.7 Contract Implementation
The contract resulting from this solicitation is tentatively scheduled to begin August of 2020. Upon award notification and prior to final contract approval, the successful proposer will be required to submit:

a. Proof of insurance documentation as specified in section 4.1 of this solicitation;
b. A completed W9 form and, if applicable, non-resident withholding exemption form, if not already on file with the City; and
c. Proof of a current City of Santa Cruz business tax certificate if the Vendor is located in, or performs services within, the city limits for more than 6 days annually.

The finalized contract will include the RFP Section 2, the RFP Section 4, the Vendor's response to Section 6 (RFP Cover Page), the Vendor's response to Section 7 (RFP Questionnaire), the Fee Schedule as described in Section 8, the City's standard terms as Exhibit A, and any negotiated modifications agreed to by the parties.

3.8 Public Record

Proposals received will become the property of the City. All proposals, evaluation documents, and any subsequent contracts will be subject to public disclosure per the "California Public Records Act," California Government Code, sections 6250 – 6270. All documents related to this solicitation will become public records once discussions and negotiations with proposers have been fully completed and an award has been announced.

Appropriately identified trade secrets will be kept confidential to the extent permitted by law. Any proposal section alleged to contain proprietary information will be identified by the proposer in boldface text at the top and bottom as "PROPRIETARY." Designating the entire proposal as proprietary is not acceptable and will not be honored. Submission of a proposal will constitute an agreement to this provision for public records. Pricing information is not considered proprietary information.

3.9 Award Protests

Any Vendor who unsuccessfully bids on a city contract or any trade association representing workers who would have potentially been employed by such contract may formally protest a contract award. Protest letters regarding a formal contract award will be directed to:

City of Santa Cruz
City Clerk Administrator
809 Center Street, Room 9
Santa Cruz, California 95060

Protests will be filed with the City Clerk's office no later than 5 business days after the written notice of intention to award has been distributed. Protest letters will include:

- The name, address, and telephone number of the protester;
- The solicitation title and due date;
- Name of City employee and Department designated as the contact in the original solicitation;
- A detailed statement of the legal and/or factual grounds for the protest; and
- The form of relief requested.

The City Council will hear the protest prior to award of the contract. The protesting party may protest the City's or successful Vendor's failure to comply with the requirements of the Purchasing Ordinance or the solicitation documents. The protest must clearly set forth the basis for the protest; grounds not set forth in the written protest will not be considered by the City Council at the protest hearing. The City Council will sustain a protest if the protesting party demonstrates by clear and convincing evidence that, as specified above, the City would act improperly in awarding the contract. The decision of the City Council will be final.

4. TERMS AND CONDITIONS

4.1 City's Standard Terms and Conditions

The City of Santa Cruz standard terms and conditions shall govern this contract except with regard to insurance requirements. Review the standard terms and conditions here; all terms will apply to the contract resulting from this solicitation. A current copy of these terms will be included in the resulting contract as an Exhibit. A hard copy of the terms and conditions are available by contacting the Purchasing Division at 831/420-5080.

4.1.1 Insurance Requirements

Vendor will maintain and comply with the insurance requirements as set forth in Exhibit A. These requirements will be included in the resulting contract as an Exhibit.

4.2 Subject to SB2 Grant standard Agreement

The Terms and Conditions of the SB2 Grant Funds, as expressed in STD 213 are incorporated herein by reference, and shall be applicable to any contract between the City and the selected vendor.

4.3 Term of Contract

The term of the contract will commence upon notification of award and continue for a period of **ONE YEAR** plus any renewals agreed to by the parties.

4.4 Contract Renewal

At the option of the City, this contract may be renewed annually under the same contractual terms and conditions and at the same price or price basis.

4.5 Vendor Travel Reimbursement Policy

When it is mutually agreed between the City and the vendor, the vendor's employees will be reimbursed for travel expenses according to this policy. It is expected that all travel expenses incurred by vendors while conducting activities on behalf of the City will be at reasonable rates and that vendors will exercise prudence in incurring these expenses.

Meals

Meals are reimbursed at the current GSA Meals & Incidental per diem rate by county (www.gsa.gov/travel). The City does not reimburse for actual costs for meals. Reimbursement is based solely on per diem rates. Do not submit meal receipts.

- Travel before 8:00a qualifies for breakfast reimbursement.
- Travel between 8:00a – 1:30p qualifies for lunch reimbursement.
- Travel between 1:30p – 7:00p (or later) qualifies for dinner reimbursement.
- Days between hotel stays and days starting before 8a and ending after 7p, qualify for the full GSA Meals & Incidental per diem rate.

Ground Transportation

Ground transportation is reimbursable when it is for travel between the vendor's place of business, their employee's home, an airport, or Santa Cruz hotel to their City work location.

1. Reasonable fees for taxis, shuttles, busses, trains, light rail, ride hailing services (Uber, Lyft), bike shares| (Jump), and similar modes of transportation will be reimbursed. Receipts are required for reimbursement.
2. Personal vehicles include vehicles owned by the vendor or their employees.
   - Mileage will be reimbursed at the current IRS mileage rate.
   - Evidence of automobile liability insurance meeting the City's requirements must be provided.
   - Maps showing starting point, City work location, and total miles are required for reimbursement.
3. Car rentals are reimbursable when

- Travel is necessary from an airport to the City work location.
- The rental reservation is made as far in advance as is practical and the lowest possible price is obtained.
- Insurance coverage is included in the rental agreement and the car is returned with a full tank of gas.
- The smallest vehicle necessary is rented.
- Parking expenses are included in the GSA Meals & Incidental per diem rate. The City will not pay additionally for parking expenses.
- Receipts are required for reimbursement.

Airfare
Airfare is reimbursable when the vendor's place of business, or their employee's home, is more than 250 miles away from Santa Cruz.

- Airfare must be lowest available coach class fare. Flights may be non-stop.
- Airfare must be booked as far in advance as is practical.
- Fees for one piece of checked luggage (and any equipment necessary for the work being done) will be reimbursed.
- Extra charges for seat assignments, refundable tickets, travel insurance/protection, and similar fees are not reimbursable.
- If the City cancels the need for travel and the ticket cannot be changed or refunded, the ticket cost will be reimbursable.
- Receipts are required for reimbursement.

Lodging
Lodging is reimbursable when the vendor must work on site for two or more consecutive days and the vendor's place of business, or their employee's home, is more than 60 miles away from Santa Cruz.

- Lodging is reimbursed up to the current GSA rate by county (www.gsa.gov/travel).
- Costs for hotel rooms above this rate are the responsibility of the traveler.
- Receipts are required for reimbursement.

General

- Travel expenses not listed above will not be reimbursed.
- Travel reimbursements are paid after the completion of travel. There are no travel advances.
- Exceptions to any of the above requirements require advance written permission from the Department Head of the department contracting with the vendor.

4.6 Equal Employment Opportunity/Non-Discrimination
City's policies promote a working environment free from abusive conduct, discrimination, harassment, and retaliation; and require equal opportunity in employment for all regardless of race, religious creed (including religious dress and grooming practices), color, national origin (including language use restrictions), ancestry, religion, disability (mental and physical), medical condition, sex, gender (including gender identity and gender expression), physical characteristics, marital status, age, sexual orientation, genetic information (including family health history and genetic test results), organizational affiliation, and military or and veteran status, or any other consideration made unlawful by local, State or Federal law. City requires Consultant to be in compliance with all applicable Federal and State and local equal employment opportunity acts, laws, and regulations and Consultant is responsible for ensuring that effective policies and procedures concerning the prevention of abusive conduct, discrimination, harassment, and retaliation exist in Consultant's business organization. The City's current Equal Employment Opportunity and Non-Discrimination policies to which this Section applies may be viewed at http://www.codepublishing.com/CA/SantaCruz/?SantaCruz09/SantaCruz0983.html and http://www.cityofsantacruz.com/home/showdocument?id=59192.

Copies are available upon request from the City's Purchasing Division.

4.7 Indemnification

For General Services: To the fullest extent permitted by law, Consultant agrees to indemnify, defend, and hold harmless the City, its officials, officers, employees, and volunteers from and against any and all claims, demands, actions, liabilities, damages, judgments, or expenses (including attorneys' fees and costs) arising from the acts or omissions of Consultant's employees or agents in any way related to the obligations or in the performance of services under this Agreement, except for design professional services as defined in Civil Code § 2782.8, and except where caused by the sole or active negligence, or willful misconduct of City.

For Design Professional Services under Civil Code §2782.8: To the fullest extent permitted by law, Consultant agrees to indemnify, defend, and hold harmless City, its officials, officers, employees, and volunteers from and against any and all claims, demands, actions, liabilities, damages, or expenses (including attorneys' fees and costs) arising from the negligence, recklessness, or willful misconduct of the Consultant, Consultant's employees, or agents in any way related to the obligations or in the performance of design professional services under this Agreement as defined in Civil Code §2782.8, except where caused by the sole or active negligence, or willful misconduct of City. The costs to defend charged to the Consultant relating to design professional services shall not exceed the Consultant's proportionate percentage of fault per Civil Code §2782.8.

SECTION 5: ACKNOWLEDGEMENT OF RECEIPT FORM

1. **Acknowledgement of Receipt**
   This Acknowledgement of Receipt Form will be signed and delivered to **Sarah Neuse**, **no later than 5 p.m. on May XX.** Email form to **sneuse@cityofsantacruz.com**.

   The purpose of this form is to notify the City of Vendors interested in submitting a proposal and confirming receipt of all necessary information. Vendors who elect to return this form with the indicated intention of submitting a proposal will receive copies of the City's response to questions and RFP addenda, if any are issued. However, E-mail notifications sent to known potential vendors are a convenience only.

3.4 RFP Addenda

The City may determine it is necessary to revise any part of this solicitation. Revisions will be made by written addenda and it is the Vendor's responsibility to comply with any addenda to this solicitation. Any addenda will be:

- Emailed to known interested vendors, and
- Posted on the City's website, www.cityofsantacruz.com, under Bidding Information, or
- Vendors may contact Sarah Neuse, Senior Planner at 831.420.5290 or by email to sneuse@cityofsantacruz.com.

In acknowledgement of receipt of this Request for Proposals the undersigned agrees that s/he has received a complete copy; beginning with page 1 and ending with page **#.**

This vendor ☐ does ☐ does not **(check one)** intend to submit a proposal.

If not, please provide reason (to assist City in planning future solicitations): _____

_____

Business Name: _____

Address: _____

Telephone Number: _____

Fax Number: _____

E-mail address: _____

Signature of Authorized Representative: _____

Printed Name of Authorized Representative: _____

SECTION 6: PROPOSAL COVER PAGE

1. **Proposal Deadline**

Proposals are due no later than 5:00 pm on Friday, June 19, 2020. All proposals will be delivered, on or before the due date. **Late proposals may not be considered.**
Vendors will email or file share the proposal and any attachments to sneuse@cityofsantacruz.com on or before the due date.

2. **Proposal Response Sheet**

The undersigned, upon acceptance, agrees to furnish the following in accordance with the specifications and terms and conditions per City of Santa Cruz "Request for Proposals for Objective Development Standards for Multi-Family and Mixed-Use Housing" dated May 2020, at the prices indicated herein.

The undersigned, under penalty of perjury, declares not to be a party with any other business to an agreement to bid a fixed or uniform price in connection with this proposal.

The unsigned declares under penalty of perjury that she/he is authorized to sign this document and bind the business or organization to the terms of this contract.

The undersigned recognizes the right of the City of Santa Cruz to reject any or all proposals received and to waive any informality or minor defects in proposals received.

Vendor Name: _____

Address: _____

Telephone Number: _____

Fax Number: _____

E-mail address: _____

Signature of Authorized Representative: _____

Printed Name of Authorized Representative: _____

If vendor is awarded the contract, will vendor extend contract terms and pricing to other government agencies?
☐ Yes ☐ No

3. **Addenda**

The City may determine it is necessary to revise any part of this solicitation. Revisions will be made by written addenda and it is the Vendor's responsibility to comply with any addenda to this solicitation. Any addenda will be:

- Emailed to known interested vendors, and
- Posted on the City's website, www.cityofsantacruz.com, under Bidding Information, or
- Vendors may contact Sarah Neuse, Senior Planner at 831.420.5290 or by email to sneuse@cityofsantacruz.com.

How many addenda were issued for this solicitation? _____

SECTION 7: QUESTIONNAIRE

Answer all of the following questions. Any omission may be cause for rejection of proposal. Answers should be complete and in the order presented. A simple "yes" or "no" answer is not adequate.

Vendors have the right to take exception to the specifications or terms to this solicitation. Any exceptions taken must be explained in the proposal. Any exceptions that contradict the City's terms and conditions, or contain provisions that are not in the best interest of the City will disqualify the vendor. If exceptions are not explained, the Vendor will comply with the specifications as stated in this solicitation.

Vendor's qualifications experience and references

1) Describe business background and qualifications, including year business was established.

2) Provide background of personnel that will be assigned to provide this service to the City, with emphasis on community engagement experience.

3) Describe experience doing similar work for other public agencies or community groups.

4) Describe the expertise provided by each proposed team member, and the value they add to the team.

5) Provide references and work samples from similar projects completed within the past 10 years.

Vendor's proposed work plan

6) Clearly define all work your business proposes to do for the City. Include a list of deliverables and a work schedule.

7) If you will subcontract portions of the work, list all subcontractors to be used. Include business name, address and phone number.

8) Outline the team's anticipated community engagement tools and approach, given the need for on-going social distancing over the course of the project.

9) What should the City expect regarding future technology advances? How can the City plan on managing the final documents moving forward?

SECTION 8: FEE SCHEDULE

- Detail all costs incidental to the purchase of Objective Development Standards for Multifamily and Mixed Use Housing. Include all costs in your proposal. Vendor will not be allowed to charge for costs not listed in the proposal.
- Describe under what circumstances that City would be charged for additional work.

Local Business and Locally Owned Business Preference
Local Businesses and Locally Owned Businesses must submit the attached Appendix 1: Local Business Preference Certification, with the proposal in order to receive the 2% and *additional* 4% preference. Any preference will be applied on the pricing criteria only.

Appendix 1:

Local Business Preference Certification

Business Name: _____

Local Businesses and Locally Owned Businesses must submit this certification with each bid or proposal in order to receive the 2% and *additional* 4% preference applied during the evaluation of any competitive process for goods, supplies, equipment, materials, services, or professional services.

Local Businesses
To qualify for the 2% local business preference, a business must meet the following criteria:

1) Does the business have an office with at least one employee located in the *City* of Santa Cruz?

   ☐ Yes ☐ No Business Address: _____

2) Is the business current in the payment of all taxes, charges, assessments, or fees owed to the City of Santa Cruz?

   ☐ Yes ☐ No

3) Does the business hold a valid City of Santa Cruz business license?

   ☐ Yes ☐ No DBA/license number: _____

Locally Owned Businesses
To qualify for an *additional* 4% locally owned business preference, a business must meet the above requirements for a local business and at least 50% of the business' owners must live in the *County* of Santa Cruz.

To qualify for the locally owned business preference, list all of the business' owners and their county of residence (attach additional sheets if necessary).

Owner Name: _____ County: _____

Owner Name: _____ County: _____

Owner Name: _____ County: _____

Owner Name: _____ County: _____

By submitting this form, I represent that I qualify as a (check all that apply):

☐ Local Business
☐ Locally Owned Business

I understand that by submitting false information or failing to disclose material information in order to qualify for the preference my business will be 1) required to pay the city any difference between the contract amount and what the city's cost would have been if the contract had been properly awarded, and 2) prohibited from bidding on any city contract or receiving any city contract for a period of three years of the discovery of facts supporting the same.

Authorized Signature: _____

Name & Title: _____

Date: _____

Appendix 2: List of Potentially Affected Community Interests

ENVIRONMENTAL:

1. Camp. for Sensible Transportation
2. Center for Marine Conservation
3. Center for Natural Lands Management
4. Citizen's Climate Lobby
5. Coastal Commission
6. Coastal Science and Policy Program (UCSC)
7. Coastal Watershed Council
8. Coastwalk
9. Conservationalists
10. Ecology Action
11. Education for Sustainable Living Program
12. Friends of Parks and Recreation
13. Friends of Santa Cruz State Parks
14. Friends of the Rail Trail
15. Friends of the River
16. Greenbelt Alliance
17. Grid Alternatives
18. Groundswell Coastal Ecology
19. Homeless Garden Project
20. Jimmy Panetta's Environmental Working Group
21. Land Trust of Santa Cruz County
22. Monterey Bay Air Resources District
23. Santa Cruz Community Climate Action Task Force
24. Santa Cruz County Greenway
25. SC Climate Action Network
26. Sierra Club-Santa Cruz Chapter
27. UCSC Student Environmental Center
28. Think Local First
29. Tree People
30. UCSC
31. USGS

BUSINESS COMMUNITY:

32. SCC Chamber
33. Business Community
34. Business Council
35. Santa Cruz Works
36. SC New Tech Meetup
37. Businesses

38. Major Employers
39. MidTown Business Assn
40. Neighborhood of Lower Ocean
41. UCSC
42. County of SC
43. Boardwalk
44. Costco
45. Employees of City businesses
46. Employees who live outside the City
47. Commuters
48. Shoppers

ENERGY:

49. Central Coast Energy Services
50. Monterey Bay Community Power

HOUSING:

51. Afford. Housing Advocates
52. Affordable Housing Developers
53. Developers
54. Affordable Housing Now
55. YIMBY
56. NIMBYs
57. East Side Residents
58. West Side Residents
59. Downtown and Beach Area Residents
60. Current Residents
61. Current Neighbors
62. Future Residents
63. Future Neighbors
64. Potentially Displaced Residents
65. Renters
66. Landlords
67. Home Owners
68. Santa Cruz County Realtors
69. Contractors
70. Santa Cruz Together
71. Movement for Housing Justice
72. Tenant Sanctuary
73. Save Santa Cruz
74. Neighborly Santa Cruz

OTHER:

75. Event Santa Cruz
76. Historic Precedent
77. Art Comission
78. Sensible Transportation
79. Childcare Providers
80. RTC Bike committee
81. PW Commission
82. Bike SC County
83. Community Traffic Safety Coalition
84. Ecology Action
85. MIssion Pedestrian
86. SC Neighbors
87. Branciforte Action Committee
88. Harvey West Business Assn
89. Ocean St Extension Nbhd Assn
90. SC County Cycling Club

COMMUNITY:

91. UCSC Students
92. Children
93. Youth
94. Tourists
95. Bicyclists
96. Walkers
97. Dog Owners
98. Runners/joggers
99. Hispanic community
100. Seniors
101. Elderly
102. Santa Cruz City Schools
103. Private Schools
104. Historic Preservation
105. Event Space Users
106. Individuals experiencing Homelessness
107. Homless advocates
108. Drivers/parkers
109. Cyclists
110. Low income residents
111. Moderate income residents
112. Above Moderate income residents

STATE AGENCIES:

113. Cal Trans
114. Cal Fish and Wildlife
115. Cal Fire

LOCAL AGENCIES:

116. City Attorney
117. Housing Engagement
118. Public Works Dept
119. Parks and Rec Dept
120. Planning Dept
121. Economic Development Dept
122. City Council
123. Finance Department
124. Police Department
125. Fire Department
126. Public Works Comission
127. Regional Transportation Comission
128. Arts Comission
129. Historic Preservation Commission
130. Parks and Recreation Commission
131. Planning Commission
132. Transportation and Public Works Commission
133. Water Commission
134. Building Division

TRANSPORTATION:

135. Santa Cruz County Regional Transportation Comission Bike Committee
136. Santa Cruz County Regional Transportation Comission
137. CALTRANS
138. Campaign for Sustainable Transportation
139. Desal Alternatives
140. Religious Groups
141. Communities Organized for Relational Power and Action (COPA)
142. Churches/Religious groups as land owners
143. Labor Groups
144. IBEW
145. SEIU
146. Mid-Mgmt
147. Supervisors
148. POA
149. Temp-SEIU

150. IAF
151. Police Mgmt
152. Fire Mgmt
153. Construction Unions

EXHIBIT A: INSURANCE REQUIREMENTS

A. CERTIFICATE REQUIREMENTS

The City will be issued a Certificate of Insurance (a Memorandum of Understanding will not be accepted) with the following minimum requirements:

1. Certificate(s) will show current policy number(s) and effective dates,
2. Coverage and policy limits will meet, or exceed, requirements below,
3. The Certificate Holder will be City of Santa Cruz, Risk Management, 877 Cedar St., Suite 100, Santa Cruz, CA 95060,
4. Certificate will be signed by an authorized representative,
5. An endorsement will be provided to show the City, its officers, officials, employees, and volunteers as additional insureds.

B. MINIMUM SCOPE AND LIMITS OF INSURANCE

Consultant acknowledges that the insurance coverage and policy limits set forth in this section constitute the minimum amount of coverage required. The City will be entitled to coverage for the highest limits maintained by Consultant. Coverage will be at least as broad as:

1. COMMERCIAL GENERAL LIABILITY (CGL): $1,000,000 PER OCCURRENCE
   1.1.1. Proof of coverage for $1 Million per occurrence including products and completed operations, property damage, bodily injury, personal and advertising injury will be provided on Insurance Services Office (ISO) Form CG 00 01 covering CGL. If a general aggregate limit applies, either the general aggregate limit will apply separately to this project/location or the general aggregate limit will be at least twice the required occurrence limit.

2. PROFESSIONAL LIABILITY (ERRORS AND OMISSIONS): $2,000,000 PER OCCURRENCE OR CLAIM, $2,000,000 AGGREGATE.
   2.1.1. Consultant will maintain insurance appropriate to Consultant's profession; with limit no less than $2,000,000 per occurrence or claim, $2,000,000 aggregate. Insurance must be maintained and evidence of insurance must be provided for at least five (5) years after date of completion of the services under this Agreement. If coverage is canceled or non-renewed and not replaced with another claims-made policy form with a Retroactive Date prior to the contract effective date or start of work date, Consultant must purchase "extended reporting" coverage for a minimum of five (5) years after completion of contract work.

3. AUTOMOBILE LIABILITY:
   3.1.1. Proof of coverage for $1,000,000 provided on ISO Form Number CA 00 01 covering any auto (Code 1), or if Consultant has no owned autos, hired, (Code 8) and non-owned autos (Code 9), per accident for bodily injury and property damage.

4. WORKERS' COMPENSATION AS REQUIRED BY THE STATE OF CALIFORNIA, WITH STATUTORY LIMITS, AND EMPLOYER'S LIABILITY INSURANCE: $1,000,000 per accident for bodily injury or disease. Must include a waiver of subrogation.

If Consultant maintains broader coverage and/or higher limits than the minimums shown above, the City of Santa Cruz requires and shall be entitled to the broader coverage and/or higher limits maintained by Consultant. Any available insurance proceeds in excess of the specified minimum limits of insurance and coverage shall be available to the City of Santa Cruz.

C. OTHER INSURANCE PROVISIONS

The insurance policies are to contain, or be endorsed to contain, the following provisions:

- ADDITIONAL INSURED STATUS

The City, its officers, officials, employees and volunteers are to be covered as additional insureds on the CGL policy with respect to liability arising out of work or operations performed by or on behalf of Consultant including materials, parts, or equipment furnished in connection with such work or operations. General liability coverage will be provided in the form of an endorsement to Consultant's insurance at least as broad as ISO Form CG 20 10 11 85, or if not available, through the addition of both CG 20 10 and CG 20 37 (if a later edition is used).

- PRIMARY COVERAGE
  For any claims related to this agreement, Consultant's insurance coverage will be **primary** insurance as respects the City, its officers, officials, employees, and volunteers. Any insurance or self-insurance maintained by the City, its officers, officials, employees, or volunteers will be excess of Consultant's insurance and will not contribute with it.

- NOTICE OF CANCELLATION
  Each insurance policy required above shall state that the coverage shall not be canceled, except with notice to the City.

- WAIVER OF SUBROGATION
  Consultant hereby grants to the City a waiver of any right to subrogation which any insurer of said Consultant may acquire against the City by virtue of the payment of any loss, including attorney's fees under such insurance. Consultant agrees to obtain any endorsement that may be necessary to effect this waiver of subrogation, but this provision applies regardless of whether or not the City has received a waiver of subrogation endorsement from the insurer. The Worker's Compensation policy will be endorsed with a waiver of subrogation in favor of the City for all work performed by the Consultant and its employees.

- DEDUCTIBLES AND SELF-INSURED RETENTIONS
  Any deductibles or self-insured retentions must be declared to and approved by the City. City may require Consultant to purchase coverage with a lower retention or provide proof of ability to pay losses and related expenses. The policy language shall provide, or be endorsed to provide, that the self-insured retention may be satisfied by either the named insured or City.

- ACCEPTABILITY OF INSURERS
  Insurance is to be placed with insurers with a current A.M. Best's rating of no less than A:VII, unless otherwise acceptable to the Entity.

- CLAIMS MADE POLICIES
  If any of the required policies provide coverage on a claims-made basis:

1. The Retroactive Date must be shown and must be before the date of the contract or the beginning of contract work.
2. Insurance must be maintained and evidence of insurance must be provided for at least five (5) years after completion of the contract of work.
3. If coverage is canceled or non-renewed, and not *replaced with another claims-made policy form with a Retroactive Dat*e prior to the contract effective date, the Consultant must purchase "extended reporting" coverage for a minimum of *five (5)* years after completion of contract work.

- VERIFICATION OF COVERAGE
  Consultant will furnish the City with original certificates and amendatory endorsements or copies of the applicable policy language effecting coverage required by this clause. All certificates and endorsements are to be received and approved by the City before work commences. However, failure to obtain the required documents prior to the work beginning will not waive the Consultant's obligation to provide them. The City reserves the right to require complete, certified copies of all required insurance policies, including endorsements required by these specifications, at any time.

D. SUBCONTRACTORS

Consultant shall require and verify that all subcontractors maintain insurance meeting all the requirements stated herein, and Contractor shall ensure that City is an additional insured on insurance required from subcontractors.

E. SPECIAL RISKS/CIRCUMSTANCES

City reserves the right to modify these requirements, including limits, based on the nature of the risk, prior experience, insurer, coverage, or other special circumstances.

Objective Standards for Multi-Family Housing

CITY COUNCIL
AUGUST 25, 2020

Background

- **2030 General Plan and Zoning Ordinance**
  - General Plan adopted **2012**
  - Zoning **does not implement**
- **August 2019**
  - **Cease work** on Corridors Plan
  - Begin **new effort**
- **October 2019**
  - SB2 grant to **create objective standards**
- **May 2020**
  - **RFP** released
  - Grant **Funds appropriated**
- **Summer 2020**
  - Procurement Process
  - **Urban Planning Partners** selected

Proposal Strengths

URBAN PLANNING PARTNERS INC.

STRATEGICECONOMICS

InterEthnica
Multicultural Marketing & Design

- Technically **strong team**
- Understanding of **local community**
- **Education** for community understanding
- **Social justice and anti-racist lens** on zoning patterns
- Proven tools for **participation**

Scope of Work
Objective Standards for Housing

- September 2020 to **November 2021**
- Budget just under **$180,000**
- **Four primary tasks**:

1. Information Gathering
2. Community Engagement
3. Draft Objective Standards
4. Public Hearings

Scope of Work
Objective Standards for Housing

- Task 1: **Information Gathering**
  - Task 1A: Kick off Meeting
  - Task 1B: Planning Document Review
  - Task 1C: Existing Conditions Analysis
    - Optional: Analyze existing parking usage
- Task 2: **Community Engagement**
  - Task 2A: Engagement Strategy
  - Task 2B: Identifying Engagement Methods
  - Task 2C: Implementation

"I don't want endless meetings and outreach. I just want housing to get built without any fanfare except for the new residents being very excited to move in."

- Resident quote from HBS' Survey on Community Outreach

Scope of Work
Objective Standards for Housing

- Task 3: **Draft Objective Standards**
  - Task 3A: Test-fit Existing Objective Standards
  - Task 3B: Develop Draft Objective Standards
    - Optional: Develop parking supply recommendations
  - Task 3C: Visualize Draft Objective Standards
  - Task 3D: Refine Draft Objective Standards
- Task 4: **Public Hearings**

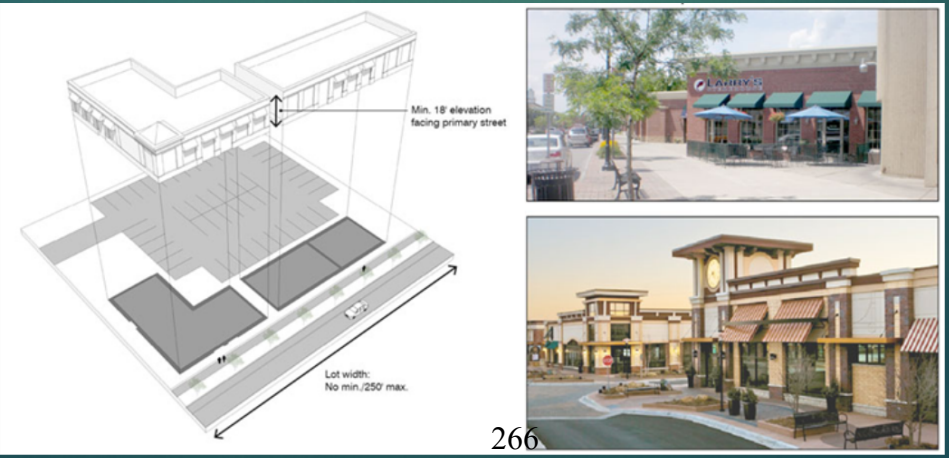

Planning Commission Role
Objective Standards for Housing

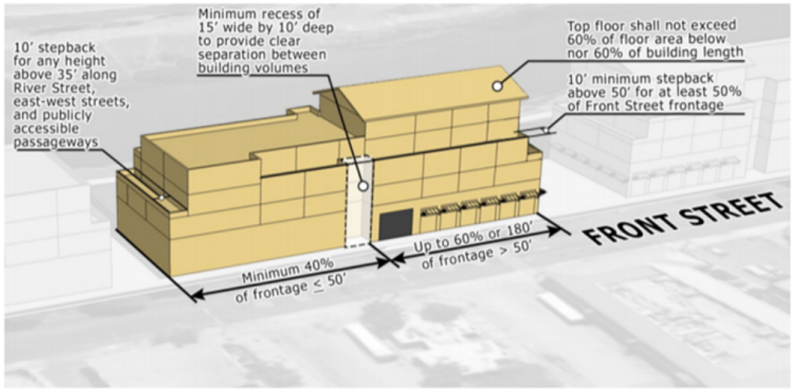

Figure H-7: Example of distribution of frontage heights and horizontal massing variation along Front Street.

- Ensure Commission adds **value**
- CAC/TAC vs. Broad and **inclusive outreach**
- **Advisory** role
- Detailed updates at **key milestones**:
  - Community Engagement Strategy
  - Results of Test-fit for Existing Standards
  - Visualization of Draft Standards
  - Formal Hearing of Draft Standards

Consultant Introduction
Objective Standards for Housing

URBAN
PLANNING
PARTNERS
INC.

Staff Recommendation:

1. Direct the City Manager to execute the contract, in a form approved by the City Attorney, with Urban Planning Partners in the amount of $179,935 to procure consultant services to create Objective Development Standards for Mixed-Use and Multifamily Housing;
2. Authorize the City Manager to approve change orders not to exceed $23,300 for the optional parking tasks called out in the scope of work. and
3. Direct Staff to invite the Planning Commission to significant outreach events and incorporate regular updates to the Planning Commission into the project schedule.

Questions?